Self-aligning ball bearings



Matrix for bearing preselection 373

1 Self-aligning ball bearings 374

1.1 Bearing design 374
1.2 Load carrying capacity 376
1.3 Compensation of angular misalignments 376
1.4 Lubrication 377
1.5 Sealing 377
1.6 Speeds 378

FAG



1.7 Noise _____ *378*
1.8 Temperature range _____ *378*
1.9 Cages _____ *379*
1.10 Internal clearance _____ *379*
1.11 Dimensions, tolerances _____ *380*
1.12 Suffixes _____ *381*
1.13 Structure of bearing designation _____ *381*
1.14 Dimensioning _____ *382*
1.15 Minimum load _____ *382*
1.16 Design of bearing arrangements _____ *383*
1.17 Mounting and dismounting _____ *387*
1.18 Legal notice regarding data freshness _____ *389*
1.19 Further information _____ *389*

Product tables _____ *390*

Self-aligning ball bearings with cylindrical or tapered bore _____ *390*
Self-aligning ball bearings with extended inner ring _____ *404*
Self-aligning ball bearings with adapter sleeve _____ *406*

Matrix for bearing preselection

The matrix gives an overview of the types and design features.

It can be used to make a preliminary assessment of whether a bearing is fundamentally suitable for the envisaged application.

The additional information provided in the product chapter (see column "detailed information") and in the Technical principles must, however, be observed in addition to this overview in selection of the bearing.

+++ extremely suitable
++ highly suitable
+ suitable
(+) suitable with restrictions
– not suitable/not applicable
✓ available

Design features and suitability			Self-aligning ball bearings			
			cylindrical or tapered bore	with extended inner ring	with adapter sleeve	detailed information ➤ 374
Load carrying capacity	radial		++	++	++	➤ 376|1.2
	axial, one direction		(+)	(+)	(+)	➤ 376|1.2
	axial, both directions		(+)	(+)	(+)	➤ 376|1.2
	moments		–	–	–	
Compensation of angular misalignments	static		+++	+++	+++	➤ 376|1.3
	dynamic		+++	+++	+++	➤ 376|1.3
Bearing design	cylindrical bore		✓	✓	✓	➤ 374|1.1
	tapered bore		✓	–	–	➤ 374|1.1
	separable		–	–	–	➤ 387|1.17
Lubrication	greased		✓[1]	–	✓[1]	➤ 377|1.4
Sealing	open		✓	✓	✓	➤ 377|1.5
	non-contact		–	–	–	
	contact		✓	–	✓	➤ 377|1.5
Operating temperature in °C	from to		–30 +150[2]	–30 +150	–30 +150[2]	➤ 378|1.8
Suitability for	high speeds		+	+	+	➤ 378|1.6
	high running accuracy		–	–	–	➤ 380|1.11 ➤ 115
	low-noise running		(+)	(+)	(+)	➤ 378|1.7 ➤ 27
	high rigidity		(+)	(+)	(+)	➤ 54
	reduced friction		++	++	++	➤ 56
	length compensation within bearing		–	–	–	
	non-locating bearing arrangement		+	+	+	➤ 141
	locating bearing arrangement		+	+	+	➤ 141
X-life design			–	–	–	
Bearing bore[3] d in mm	from to		5 150	20 60	17 100	➤ 390
Product tables	from page ➤		390	404	406	

1) Sealed bearings only
2) Valid for open bearings with brass cage
3) For bearings with adapter sleeve: inside diameter of adapter sleeve

1 Self-aligning ball bearings

Self-aligning ball bearings are particularly suitable:
- if there is skewing between the outer and inner ring (for the compensation of angular misalignments) ➤*376|1.3*
- for bearing arrangements with high radial loads ➤*376|1.2*
- for higher speeds on account of their point contact, than barrel roller bearings with line contact
- where bearings with the above-mentioned characteristics are expected to run more quietly and at lower temperatures, even at high speeds

For an overview of other product-specific features, see the Matrix for bearing preselection ➤*373*.

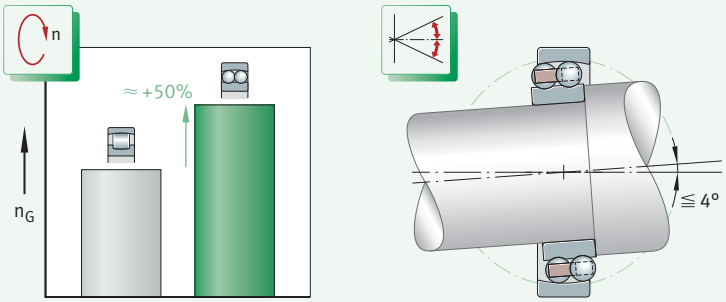

1 *Self-aligning ball bearing: speed comparison with barrel roller bearing, compensation of misalignments*

n_G = *limiting speed*

1.1 Bearing design

✎ *Design variants*

Self-aligning ball bearings are available as:
- bearings of basic design ➤*375|2*
- bearings with extended inner ring and locating slot ➤*375|3*
- bearings with adapter sleeve ➤*375|4*
- bearings with ball projection ➤*376|5*

Bearings of basic design

✎ *The outer ring has a curved raceway*

Self-aligning ball bearings are double row, self-retaining radial ball bearings, which are part of the group of self-aligning bearings. The outer ring has a single concave raceway for the two rows of balls. As a result, the bearings permit the compensation of static and dynamic angular misalignments (skewing between the inner and outer ring) within certain limits ➤*376|1.3*. The inner ring has two formed raceway grooves in which the rolling elements run. Solid cages made from polyamide PA66 or brass are used ➤*379|2*.

✎ *The bore is cylindrical or tapered*

Bearings of basic design are supplied with a cylindrical bore; self-aligning ball bearings of series 12, 13, 22 and 23 are also available with a tapered bore ➤*375|2*.

DIN ISO

Bearings with a tapered bore have a bore taper of 1:12 and the suffix K ➤*381|5*.

2
Self-aligning ball bearings of basic design

F_r = *radial load*
F_a = *axial load*

① *Self-aligning ball bearing with cylindrical bore, open*
② *Self-aligning ball bearing with tapered bore, open, bore taper 1:12*

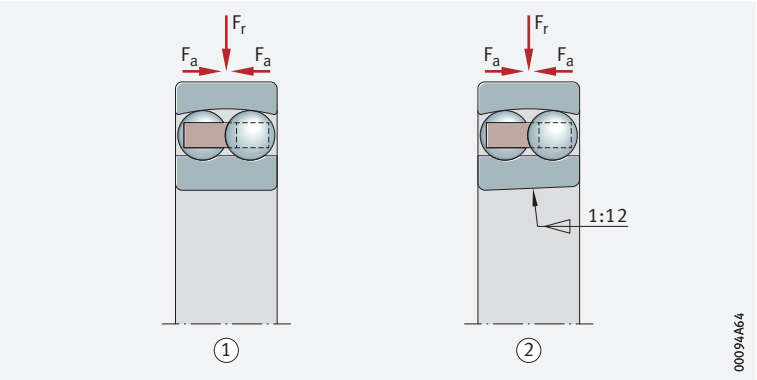

Bearings with extended inner ring and locating slot

Suitable for simple bearing arrangements

Self-aligning ball bearings of series 112 have an extended inner ring with cylindrical bore on both sides and a slot on one side of the inner ring ➤*375*|*3*. These bearings are particularly suitable for simple bearing arrangements with conventional shafts. Due to the bearing bore tolerance J7, mounting and dismounting of this type is very simple. The slot is used to locate the bearings in an axial direction by means of a grub screw; ➤*384*|*8*.

3
Self-aligning ball bearing with extended inner ring and locating slot

F_r = *radial load*
F_a = *axial load*

① *Locating slot*

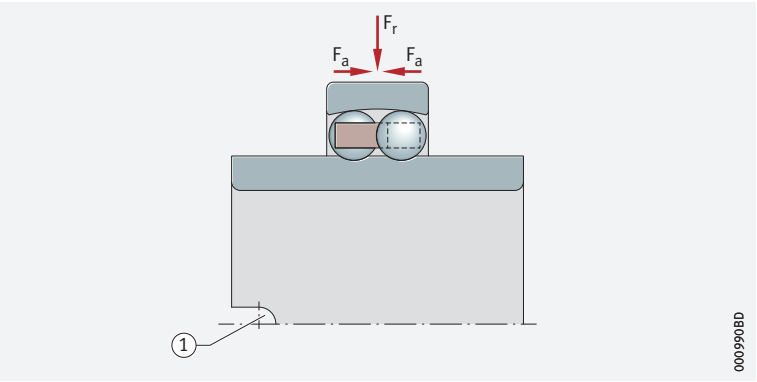

Bearings with adapter sleeve

Ready-to-fit bearing mounting kits facilitate the ordering and mounting of self-aligning ball bearings

Complete bearing mounting kits are also available for use in locating self-aligning ball bearings with a tapered bore on a cylindrical shaft journal. These units comprise the bearing, slotted adapter sleeve, tab washer and locknut (series 12..-K + H, 13..-K + H, 22..-K + H, 23..-K + H, 22..-K-2RS + H) ➤*375*|*4*. Adapter sleeves allow bearings to be located on smooth and stepped shafts. The adapter sleeves must also be stated when placing the order. Ordering example ➤*381*|*7*.

4
Self-aligning ball bearings with adapter sleeve

F_r = *radial load*
F_a = *axial load*

① *Self-aligning ball bearing, open*
② *Self-aligning ball bearing, lip seal on both sides*
③ *Adapter sleeve*
④ *Locknut*
⑤ *Tab washer*

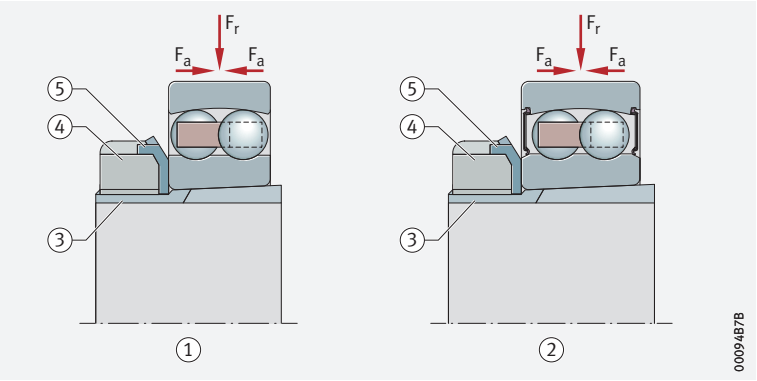

Bearings with ball projection

✎ The dimension C_1 must be observed

In some self-aligning ball bearings with a brass cage (bearings with the suffix M), the balls project to a certain extent at the sides ➤376|5.

The projection is marked C_1 in the product tables. This must be taken into consideration when defining the dimensions for the adjacent parts.

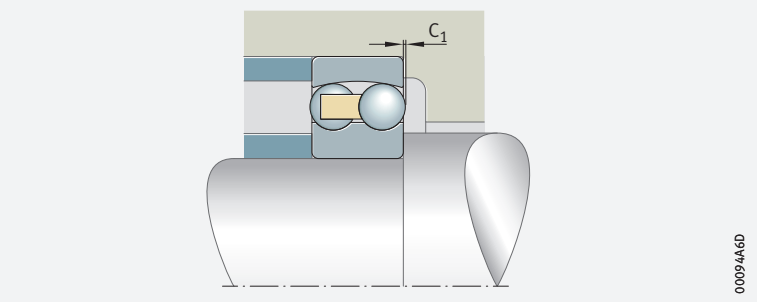

5
Self-aligning ball bearing with ball projection

C_1 = *ball projection*

1.2 Load carrying capacity

✎ Suitable for high radial and low axial loads

In addition to high radial forces, self-aligning ball bearings also support low axial forces from both directions ➤375|2 to ➤375|4. Due to the point contact with which the rolling elements are in contact with the raceways, the radial load carrying capacity of the bearings is lower than for barrel roller bearings with line contact.

Axial load carrying capacity of bearings with adapter sleeve

Where bearings with adapter sleeves are located on a smooth shaft without a fixed stop (e.g. rigid shoulder), their axial load carrying capacity is dependent on the friction between the shaft and the sleeve.

If there is any doubt about the axial load carrying capacity of the location method, please consult Schaeffler.

1.3 Compensation of angular misalignments

✎ Self-aligning ball bearings compensate dynamic and static angular misalignments

Due to the concave rolling element raceway in the outer ring, self-aligning ball bearings are capable of angular adjustment. As a result, they permit skewing between the outer and inner ring within certain limits, without causing damage to the bearings, and can thus compensate misalignments, shaft deflections and housing deformations.

Permissible adjustment angle

With a rotating inner ring, self-aligning ball bearings can swivel up to 4° from their central position

Under normal operating conditions and with a rotating inner ring, self-aligning ball bearings can swivel up to 4° from their central position, whereas sealed bearings can swivel up to 1,5°. The extent to which these values can be used in practice is, however, essentially dependent on the design of the bearing arrangement.

If the outer ring rotates or the inner ring undergoes tumbling motion, the angular adjustment facility is considerably smaller. In such cases, please consult Schaeffler.

1.4 Lubrication

Greased bearings are maintenance-free

Sealed self-aligning ball bearings are lubricated with a high quality lithium soap grease with a mineral oil base, which has good anti-corrosion characteristics. The grease filling is measured so that it is sufficient for the entire life of the bearing. As a result, these bearings are maintenance-free.

Do not wash greased bearings out prior to mounting. If mounting is carried out using thermal tools, the bearings should not be heated to a temperature in excess of +80 °C, taking account of the grease filling and seal material. If higher heating temperatures are required, it must be ensured that the permissible upper temperature limits for grease and seals are not exceeded.

Schaeffler recommends the use of induction heating devices for heating purposes ➤*388*.

Lubrication for ungreased bearings

Open bearings are not greased. They can be lubricated from the end faces using oil or grease.

Compatibility with plastic cages

When using bearings with plastic cages, compatibility between the lubricant and the cage material must be ensured if synthetic oils, lubricating greases with a synthetic oil base or lubricants containing a high proportion of EP additives are used.

Observe oil change intervals

Aged oil and additives in the oil can impair the operating life of plastics at high temperatures. As a result, stipulated oil change intervals must be strictly observed.

1.5 Sealing

Also available with lip seals

Self-aligning ball bearings of series 22 and 23 are also available with contact seals on both sides of the bearing ➤*375*|*4*. The integration of such seals into the bearing provides a compact, economical and reliable solution for the sealing of bearing arrangements. In order that the highest possible sealing effect can still be achieved with minimum friction, the seal lips are in contact with the ground opposing running surface of the inner ring under light pressure. The sealing material used is the proven, oil-resistant and wear-resistant elastomer material NBR. Sealed self-aligning ball bearings have the suffix 2RS ➤*381*|*5*.

Sealing can be achieved in the adjacent construction, if the bearings are open

In the case of unsealed bearings, sealing of the bearing position must be carried out in the adjacent construction. The sealing system should reliably prevent:

- moisture and contaminants from entering the bearing
- the egress of lubricant from the bearing

1.6 Speeds

✎ *Speeds in the product tables*

The product tables generally give two speeds for the bearings:

- the kinematic limiting speed n_G
- the thermal speed rating $n_{\vartheta r}$

Limiting speeds

The limiting speed n_G is the kinematically permissible speed of the bearing. Even under favourable mounting and operating conditions, this value should not be exceeded without prior consultation with Schaeffler ➤*64*.

The values given in the product tables are valid for oil lubrication in the case of bearings without seals and for grease lubrication where bearings are supplied greased and with seals.

Bearings with solid brass cages have a significantly higher limiting speed for oil lubrication.

✎ *Values for grease lubrication*

For the grease lubrication of bearings without seals or shields, 85% of the value stated in the product tables is permissible in each case.

For the grease lubrication of bearings with solid brass cages, 65% of the value stated in the product tables is permissible in each case.

Reference speeds

✎ *$n_{\vartheta r}$ is used to calculate n_ϑ*

The thermal speed rating $n_{\vartheta r}$ is not an application-oriented speed limit, but is a calculated ancillary value for determining the thermally safe operating speed n_ϑ ➤*64*.

✎ *Bearings with contact seals*

For bearings with contact seals, no reference speeds are defined in accordance with DIN ISO 15312:2004. As a result, only the limiting speed n_G is given in the product tables for these bearings.

1.7 Noise

Schaeffler Noise Index

The Schaeffler Noise Index (SGI) is not yet available for this bearing type ➤*69*. The data for these bearing series will be introduced and updated in stages.

Further information:

- ***medias*** *https://medias.schaeffler.com*

1.8 Temperature range

✎ *Limiting values*

The operating temperature of the bearings is limited by:

- the dimensional stability of the bearing rings and rolling elements
- the cage
- the lubricant
- the seals

Possible operating temperatures of self-aligning ball bearings ➤*378* | ▦ *1*.

▦ ***1***
Permissible temperature ranges

Operating temperature	Open self-aligning ball bearings		Sealed self-aligning ball bearings
	with brass cage	with polyamide cage PA66	
	–30 °C to +150 °C	–30 °C to +120 °C	–30 °C to +100 °C, limited by the lubricant and seal material

In the event of anticipated temperatures which lie outside the stated values, please contact Schaeffler.

1.9 Cages

Solid cages made from brass and polyamide PA66 are used as standard

Standard cages and additional cage designs for self-aligning ball bearings ➤*379*|▦*2*. Other cage designs are available by agreement. With such cages, however, suitability for high speeds and temperatures as well as the basic load ratings may differ from the values for the bearings with standard cages.

For high continuous temperatures and applications with difficult operating conditions, bearings with brass or sheet steel cages should be used. If there is any uncertainty regarding cage suitability, please consult Schaeffler.

▦*2*
Cage, cage suffix, bore code

Bearing series	Solid cage made from polyamide PA66	Solid brass cage	
	TVH	M	
	standard	standard	also available for
	Bore code		
10	8	–	–
12	up to 18	from 19	–
13	up to 13	from 14	03
22	up to 16, 18	17, from 19	12, 14
23	up to 13	from 14	05 to 10, 12, 13
112	04 to 12	–	–

1.10 Internal clearance

Radial internal clearance – bearings with cylindrical bore

The standard is CN

Self-aligning ball bearings with cylindrical bore are manufactured as standard with radial internal clearance CN (normal) ➤*379*|▦*3*. CN is not stated in the designation.

Certain sizes are also available by agreement with the larger internal clearance C3.

The values for radial internal clearance correspond to DIN 620-4:2004 (ISO 5753-1:2009) ➤*379*|▦*3*. They are valid for bearings which are free from load and measurement forces (without elastic deformation).

▦*3*
Radial internal clearance of self-aligning ball bearings with cylindrical bore

Nominal bore diameter d mm		Radial internal clearance CN (Group N) µm		C3 (Group 3) µm	
over	incl.	min.	max.	min.	max.
–	6	5	15	10	20
6	10	6	17	12	25
10	14	6	19	13	26
14	18	8	21	15	28
18	24	10	23	17	30
24	30	11	24	19	35
30	40	13	29	23	40
40	50	14	31	25	44
50	65	16	36	30	50
65	80	18	40	35	60
80	100	22	48	42	70
100	120	25	56	50	83
120	140	30	68	60	100
140	160	35	80	70	120

Radial internal clearance – bearings with tapered bore

✎ *The standard is C3*

Self-aligning ball bearings with tapered bore are manufactured as standard with the larger radial internal clearance C3 ➤*380*|▦*4*.

Certain sizes are also available by agreement with internal clearance CN (normal).

The values for radial internal clearance correspond to DIN 620-4:2004 (ISO 5753-1:2009) ➤*380*|▦*4*. They are valid for bearings which are free from load and measurement forces (without elastic deformation).

▦ **4**
Radial internal clearance of self-aligning ball bearings with tapered bore

Nominal bore diameter d mm		Radial internal clearance			
		CN (Group N) µm		C3 (Group 3) µm	
over	incl.	min.	max.	min.	max.
18	24	13	26	20	33
24	30	15	28	23	39
30	40	19	35	29	46
40	50	22	39	33	52
50	65	27	47	41	61
65	80	35	57	50	75
80	100	42	68	62	90
100	120	50	81	75	108
120	140	60	98	90	130
140	160	65	110	100	150

1.11 Dimensions, tolerances

Dimension standards

The main dimensions of self-aligning ball bearings correspond to DIN 630:2011, with the exception of bearing series 112. Nominal dimensions of self-aligning ball bearings ➤*390*|▦.

✎ *Series 112*

The dimensions of self-aligning ball bearings with extended inner ring (bearing series 112) correspond to DIN 630-2, which was withdrawn in 1993. Nominal dimensions of bearings ➤*404*|▦.

Chamfer dimensions

The limiting dimensions for chamfer dimensions correspond to DIN 620-6:2004. Overview and limiting values ➤*137*|*7.11*. Nominal value of chamfer dimension ➤*390*|▦.

Tolerances

The tolerances for the dimensional and running accuracy of self-aligning ball bearings correspond to tolerance class Normal in accordance with ISO 492:2014, except for the bearing bore of bearing series 112, which is manufactured to tolerance class J7. Tolerance values in accordance with ISO 492 ➤*124*|▦*8*.

1.12 Suffixes

Suffixes describe the design and features of a bearing in more detail.

5
Suffixes and corresponding descriptions

Suffix	Description of suffix	
C3	Radial internal clearance C3 (larger than normal)	Standard for bearings with tapered bore
CN	Radial internal clearance CN (normal)	Special design for bearings with tapered bore, available by agreement
K	Tapered bore	Standard
M	Solid brass cage	Standard, cage material dependent on bearing series and bore code
TVH	Solid cage made from glass fibre reinforced polyamide PA66	
2RS	Contact seal on both sides	Dependent on bearing series

1.13 Structure of bearing designation

With ***medias*** interchange, equivalent Schaeffler bearing designations can be determined for bearing designations from other rolling bearing manufacturers *https://www.schaeffler.de/std/1B69*.

Examples of composition of bearing designation

The designation of bearings follows a set model. Examples ➤*381*|*6* and ➤*381*|*7*. The composition of designations is subject to DIN 623-1 ➤*102*|*10*.

6
Self-aligning ball bearing with tapered bore: designation structure

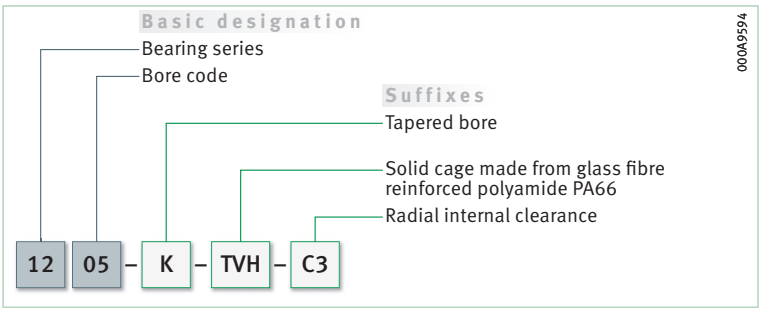

7
Self-aligning ball bearing with tapered bore and adapter sleeve: designation structure

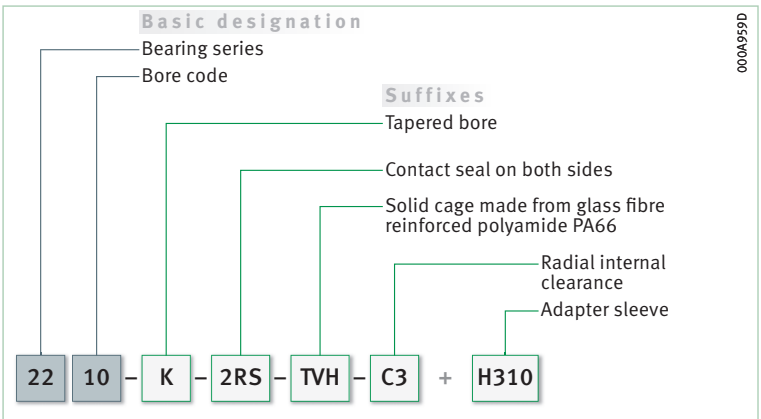

1.14 Dimensioning

Equivalent dynamic bearing load

✎ *$P = F_r$ under purely radial load of constant magnitude and direction*

The basic rating life equation $L = (C_r/P)^p$ used in the dimensioning of bearings under dynamic load assumes a load of constant magnitude and direction. In radial bearings, this is a purely radial load F_r. If this condition is met, the bearing load F_r is used in the rating life equation for P ($P = F_r$).

✎ *P is a substitute force for combined load and various load cases*

If this condition is not met, a constant radial force must first be determined for the rating life calculation that (in relation to the rating life) represents an equivalent load. This force is known as the equivalent dynamic bearing load P.

✎ *$F_a/F_r \leqq e$ or $F_a/F_r > e$*

The calculation of P is dependent on the load ratio F_a/F_r and the calculation factor e ➤*382*| *1* and ➤*382*| *2*.

1 Equivalent dynamic load

$$\frac{F_a}{F_r} \leqq e \quad \Rightarrow \quad P = F_r + Y_1 \cdot F_a$$

2 Equivalent dynamic load

$$\frac{F_a}{F_r} > e \quad \Rightarrow \quad P = 0{,}65 \cdot F_r + Y_2 \cdot F_a$$

Legend

P	N	Equivalent dynamic bearing load
F_r	N	Radial load
F_a	N	Axial load
e, Y_1, Y_2	–	Factors ➤*390*|

Equivalent static bearing load

For self-aligning ball bearings subjected to static load ➤*382*| *3*.

3 Equivalent static load

$$P_0 = F_{0r} + Y_0 \cdot F_{0a}$$

Legend

P_0	N	Equivalent static bearing load
F_{0r}, F_{0a}	N	Largest radial or axial load present (maximum load)
Y_0	–	Axial load factor ➤*390*|

Static load safety factor

✎ *$S_0 = C_0/P_0$*

In addition to the basic rating life L (L_{10h}), it is also always necessary to check the static load safety factor S_0 ➤*382*| *4*.

4 Static load safety factor

$$S_0 = \frac{C_0}{P_0}$$

Legend

S_0	–	Static load safety factor
C_0	N	Basic static load rating
P_0	N	Equivalent static bearing load.

1.15 Minimum load

✎ *In order to prevent damage due to slippage, a minimum radial load of $P > C_{0r}/100$ is required*

In order that no slippage occurs between the contact partners, the self-aligning ball bearings must be constantly subjected to a sufficiently high load. Based on experience, a minimum radial load of the order of $P > C_{0r}/100$ is thus necessary. In most cases, however, the radial load is already higher than the requisite minimum load due to the weight of the supported parts and the external forces.

If the minimum radial load is lower than indicated above, please consult Schaeffler.

1.16 Design of bearing arrangements

Support bearing rings over their entire circumference and width

In order to allow full utilisation of the load carrying capacity of the bearings and achieve the requisite rating life, the bearing rings must be rigidly and uniformly supported by means of contact surfaces over their entire circumference and over the entire width of the raceway. Support can be provided by means of a cylindrical or tapered seating surface ➤*384*|*8* to ➤*385*|*11*. The seating and contact surfaces should not be interrupted by grooves, holes or other recesses. The accuracy of mating parts must meet specific requirements ➤*385*|*6* to ➤*386*|*8*.

Radial location – fit recommendations for bearings with cylindrical bore

For secure radial location, tight fits are necessary

In addition to supporting the rings adequately, the bearings must also be securely located in a radial direction, to prevent creep of the bearing rings on the mating parts under load. This is generally achieved by means of tight fits between the bearing rings and the mating parts. If the rings are not secured adequately or correctly, this can cause severe damage to the bearings and adjacent machine parts. Influencing factors, such as the conditions of rotation, magnitude of the load, internal clearance, temperature conditions, design of the mating parts and the mounting and dismounting options must be taken into consideration in the selection of fits.

If shock type loads occur, tight fits (transition fit or interference fit) are required to prevent the rings from coming loose at any point. Clearance, transition or interference fits ➤*152*|*6* and ➤*160*|*7*.

The following information provided in Technical principles must be taken into consideration in the design of bearing arrangements:

- criteria for selection of fits ➤*146*
- conditions of rotation ➤*147*
- tolerance classes for cylindrical shaft seats (radial bearings) ➤*149*|*2*
- shaft fits ➤*152*|*6*
- tolerance classes for bearing seats in housings (radial bearings) ➤*150*|*4*
- housing fits ➤*160*|*7*
- shaft tolerances for adapter sleeves and withdrawal sleeves ➤*168*|*8*

Axial location – location methods for bearings with cylindrical bore

The bearings must also be securely located in an axial direction

As a tight fit alone is not normally sufficient to also locate the bearing rings securely on the shaft and in the housing bore in an axial direction, this must usually be achieved by means of an additional axial location or retention method. The axial location of the bearing rings must be matched to the type of bearing arrangement. Shaft and housing shoulders, housing covers, nuts, spacer rings, retaining rings, adapter and withdrawal sleeves etc., are fundamentally suitable.

Axial location – bearing series 112

Simple location by means of a grub screw

Bearings of series 112 are axially located by means of a grub screw, which engages in the slot in the bearing inner ring ➤*384*|*8*. The grub screw also prevents the inner ring creeping on the shaft.

If a shaft is to be supported by two bearings, the slots in the inner ring must either be arranged on the sides of the bearings facing towards or away from each other ➤*384*|*8*.

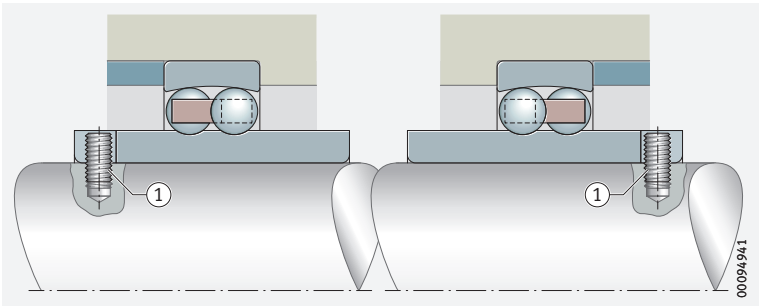

8
Axial location of bearing series 112 using grub screw and arrangement of self-aligning ball bearings, where a shaft is supported by two bearings

① *Grub screw*

Axial location – bearings with tapered bore

Location by means of locknut and tab washer

If a bearing with a tapered bore is mounted directly on a tapered journal, the bearing can be axially located with ease using a locknut and tab washer ➤*384*|*9*.

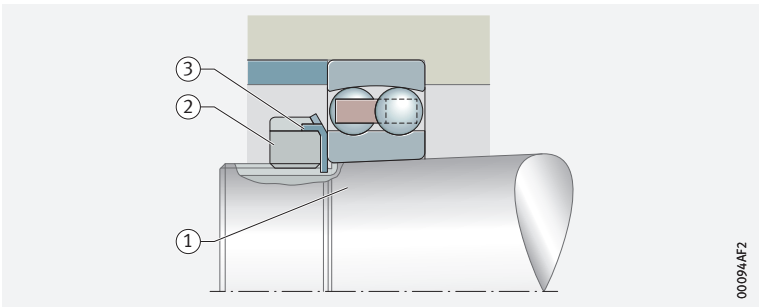

9
Self-aligning ball bearing with tapered bore, mounted directly on the tapered shaft journal

① *Tapered journal with fixing thread*
② *Locknut*
③ *Tab washer*

Location of bearings by means of adapter sleeve

Mounting can be carried out quickly and reliably by means of wrench sets from Schaeffler

Self-aligning ball bearings with a tapered bore can be located easily and with operational liability on smooth or stepped cylindrical shafts by means of an adapter sleeve ➤*384*|*10*. The adapter sleeve does not need to be secured on the shaft by any additional means. The bearings can be positioned at any point on smooth shafts. Axial load carrying capacity of bearing arrangements by means of adapter sleeve connection ➤*376*|*1.2*.

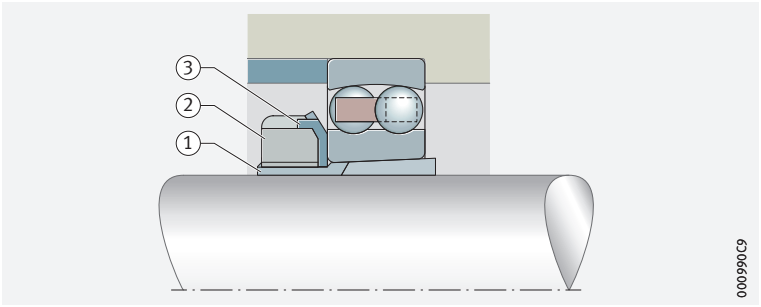

10
Self-aligning ball bearing with adapter sleeve located on smooth shaft

① *Adapter sleeve*
② *Locknut*
③ *Tab washer*

Location by means of adapter sleeve, axial abutment by means of a support ring

If very high axial forces are present, a support ring can also be used to provide axial abutment ➤*385*|◻*11*. In this instance, the mounting dimensions of the support ring B_a and d_b in the product tables must be observed ➤*390*|▦.

◻*11*
Stepped shaft, axial abutment by means of a support ring

① *Adapter sleeve*
② *Locknut*
③ *Tab washer*
④ *Support ring*
⑤ *Shaft shoulder*

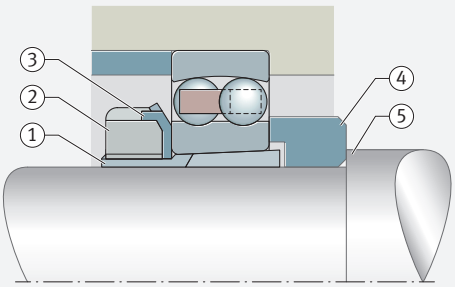

Dimensional, geometrical and running accuracy of cylindrical bearing seats

✎*A minimum of IT6 should be provided for the shaft seat and a minimum of IT7 for the housing seat*

The accuracy of the cylindrical bearing seat on the shaft and in the housing should correspond to the accuracy of the bearing used. For self-aligning ball bearings with the tolerance class Normal, the shaft seat should correspond to a minimum of standard tolerance grade IT6 and the housing seat to a minimum of IT7. Guide values for the geometrical and positional tolerances of bearing seating surfaces ➤*385*|▦*6*. Tolerances t_1 to t_3 in accordance with ➤*170*|◻*11*. Numerical values for IT grades ➤*385*|▦*7*.

▦*6*
Guide values for the geometrical and positional tolerances of bearing seating surfaces

Bearing tolerance class		Bearing seating surface	Standard tolerance grades to ISO 286-1 (IT grades)			
to ISO 492	to DIN 620		Diameter tolerance	Roundness tolerance t_1	Parallelism tolerance t_2	Total axial runout tolerance of abutment shoulder t_3
Normal	PN (P0)	Shaft	IT6 (IT5)	Circumferential load IT4/2	Circumferential load IT4/2	IT4
				Point load IT5/2	Point load IT5/2	
		Housing	IT7 (IT6)	Circumferential load IT5/2	Circumferential load IT5/2	IT5
				Point load IT6/2	Point load IT6/2	

▦*7*
Numerical values for ISO standard tolerances (IT grades) to ISO 286-1:2010

IT grade	Nominal dimension in mm						
	over	**18**	**30**	**50**	**80**	**120**	**180**	**250**
	incl.	**30**	**50**	**80**	**120**	**180**	**250**	**315**
	Values in µm							
IT4	6		7	8	10	12	14	16
IT5	9		11	13	15	18	20	23
IT6	13		16	19	22	25	29	32
IT7	21		25	30	35	40	46	52

Roughness of cylindrical bearing seating surfaces

Ra must not be too high

The roughness of the bearing seats must be matched to the tolerance class of the bearings. The mean roughness value Ra must not be too high, in order to maintain the interference loss within limits. The shafts must be ground, while the bores must be precision turned. Guide values as a function of the IT grade of bearing seating surfaces ➤*386*|▦*8*.

▦*8*
Roughness values for cylindrical bearing seating surfaces – guide values

Nominal diameter of the bearing seat d (D) mm		Recommended mean roughness value for ground bearing seats Ramax µm			
		Diameter tolerance (IT grade)			
over	incl.	IT7	IT6	IT5	IT4
–	80	1,6	0,8	0,4	0,2
80	500	1,6	1,6	0,8	0,4

Tolerances for tapered bearing seats

Specifications for tapered bearing seats

For bearings located directly on a tapered shaft journal, the further information in Technical principles must be observed ➤*173*|🗗*12*.

Mounting dimensions for the contact surfaces of bearing rings

The contact surfaces for the rings must be of sufficient height

The mounting dimensions of the shaft and housing shoulders, and spacer rings etc., must ensure that the contact surfaces for the bearing rings are of sufficient height. However, they must also reliably prevent rotating parts of the bearing from grazing stationary parts. Proven mounting dimensions for the radii and diameters of the abutment shoulders ➤*390*|▦. These dimensions are limiting dimensions (maximum or minimum dimensions); the actual values should not be higher or lower than specified.

Suitable bearing housings for self-aligning ball bearings

A large range of housings is available

For economical, operationally reliable and easily interchangeable bearing arrangement units, the self-aligning ball bearings can also be combined with Schaeffler bearing housings ➤*386*|🗗*12*. These easy-to-fit units fulfil all of the requirements for modern machine and plant designs with favourable maintenance-related characteristics.

Due to the large number of application areas, an extensive range of bearing housings is available for bearings with cylindrical and tapered bores. These include split and unsplit plummer block housings, take-up housings, flanged housings and housings for specific industrial and railway applications. Detailed information on bearing housings can be found in publication GK 1 *https://www.schaeffler.de/std/1D54*. This book can be ordered from Schaeffler.

🗗*12*
Split plummer block housing with a self-aligning ball bearing

① *Split plummer block housing*
② *Self-aligning ball bearing*

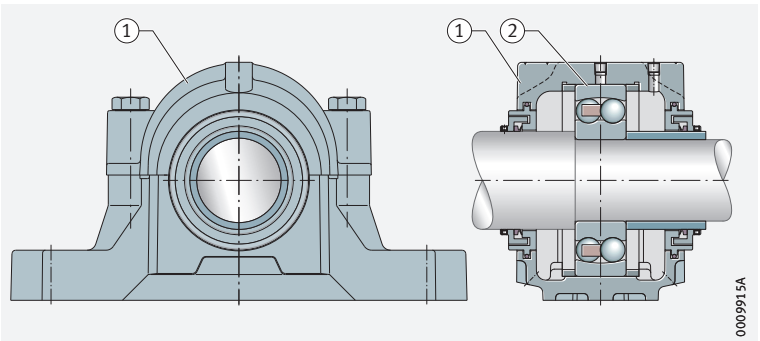

1.17 Mounting and dismounting

The mounting and dismounting options for self-aligning ball bearings, by thermal, hydraulic or mechanical methods, must be taken into consideration in the design of the bearing position.

Ensure that the bearings are not damaged during mounting

Self-aligning ball bearings are not separable. In the mounting of non-separable bearings, the mounting forces must always be applied to the bearing ring with a tight fit.

Mounting of bearings with a tapered bore

Suitable methods

Bearings with a tapered bore are mounted with a tight fit on the shaft or adapter and withdrawal sleeve. The measurement of the reduction in radial internal clearance or of the axial drive-up distance of the inner ring on the tapered bearing seat serves as an indication of the tight fit.

Measuring the reduction in radial internal clearance

The measurement is usually carried out with a feeler gauge

The reduction in radial internal clearance is the difference between the radial internal clearance before mounting and the bearing clearance after mounting of the bearing ➤387|13. The radial internal clearance must be measured first. During pressing on, the radial clearance (bearing clearance) must be checked until the necessary reduction in the radial internal clearance and thus the required tight fit is achieved.

13 *Reduction in radial internal clearance*

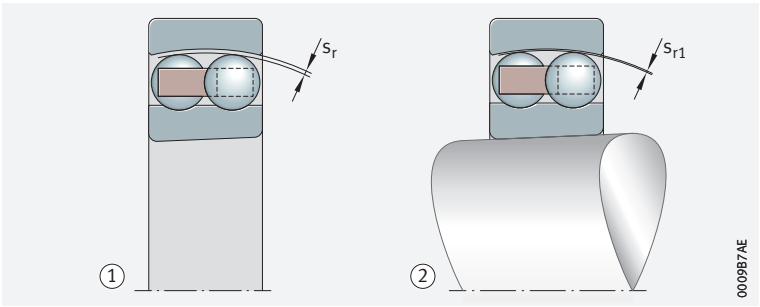

s_r = *radial internal clearance before mounting*

s_{r1} = *radial internal clearance after mounting*

$s_r - s_{r1}$ = *reduction in radial internal clearance*

① *Before mounting*

② *After mounting*

Measuring the axial drive-up distance

The axial drive-up distance can also be measured in place of the reduction in radial internal clearance ➤387|14.

14 *Axial drive-up distance*

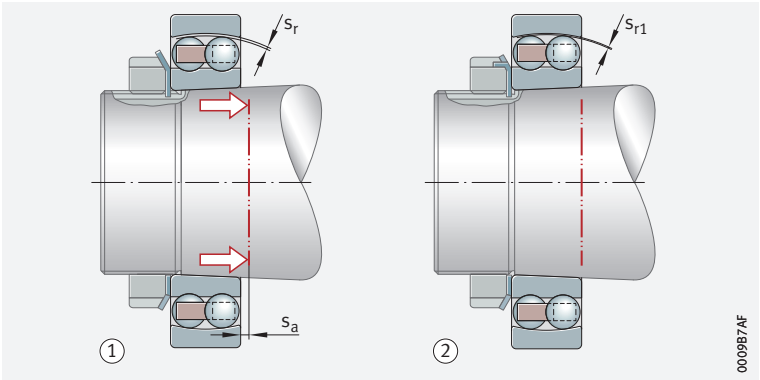

s_a = *axial press-on distance (axial drive-up distance of the bearing)*

s_r = *radial internal clearance*

s_{r1} = *radial internal clearance after pressing on*

$s_r - s_{r1}$ = *reduction in radial internal clearance*

① *Before pressing on*

② *After pressing on*

The malfunction-free operation of bearings presupposes that these have been mounted correctly. An insufficient operating clearance or inadequately tight fit on the shaft generally leads to bearing damage.

If there is any uncertainty regarding the practical application of both methods, Schaeffler must always be consulted.

The mounting of self-aligning ball bearings is also described in the Schaeffler publication BA 28. This BA publication can be requested from Schaeffler.

✎ Rolling bearings must be handled with great care

Schaeffler Mounting Handbook

Rolling bearings are well-proven precision machine elements for the design of economical and reliable bearing arrangements, which offer high operational security. In order that these products can function correctly and achieve the envisaged operating life without detrimental effect, they must be handled with care.

The Schaeffler Mounting Handbook MH 1 gives comprehensive information about the correct storage, mounting, dismounting and maintenance of rotary rolling bearings *https://www.schaeffler.de/std/1D53*. It also provides information which should be observed by the designer, in relation to the mounting, dismounting and maintenance of bearings, in the original design of the bearing position. This book is available from Schaeffler on request.

1.18 Legal notice regarding data freshness

✎ The further development of products may also result in technical changes to catalogue products

Of central interest to Schaeffler is the further development and optimisation of its products and the satisfaction of its customers. In order that you, as the customer, can keep yourself optimally informed about the progress that is being made here and with regard to the current technical status of the products, we publish any product changes which differ from the printed version in our electronic product catalogue.

§ We therefore reserve the right to make changes to the data and illustrations in this catalogue. This catalogue reflects the status at the time of printing. More recent publications released by us (as printed or digital media) will automatically precede this catalogue if they involve the same subject. Therefore, please always use our electronic product catalogue to check whether more up-to-date information or modification notices exist for your desired product.

Link to electronic product catalogue

The following link will take you to the Schaeffler electronic product catalogue: *https://medias.schaeffler.com*.

1.19 Further information

In addition to the data in this chapter, the following chapters in Technical principles must also be observed in the design of bearing arrangements:

- Determining the bearing size ➤*34*
- Rigidity ➤*54*
- Friction and increases in temperature ➤*56*
- Speeds ➤*64*
- Bearing data ➤*97*
- Lubrication ➤*70*
- Sealing ➤*185*
- Design of bearing arrangements ➤*141*
- Mounting and dismounting ➤*194*

Self-aligning ball bearings

With cylindrical or tapered bore

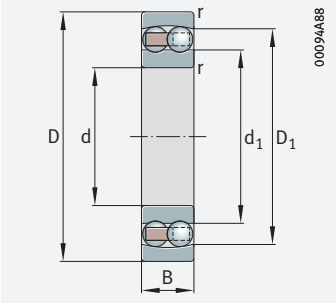

Cylindrical bore

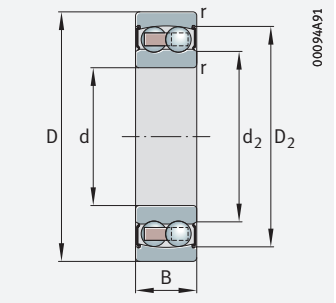

Cylindrical bore with seal 2RS

d = 5 – 20 mm

Main dimensions			Basic load ratings		Fatigue limit load	Limiting speed	Speed rating	Mass	Designation
d	D	B	dyn. C_r	stat. C_{0r}	C_{ur}	n_G	$n_{\vartheta r}$	m	➤*381|1.12* ➤*381|1.13*
			N	N	N	min^{-1}	min^{-1}	≈ kg	
5	19	6	2 600	480	30,5	41 500	24 500	0,01	**135-TVH**
6	19	6	2 600	480	30,5	41 500	30 500	0,009	**126-TVH**
7	22	7	2 750	560	35,5	39 000	26 500	0,014	**127-TVH**
8	22	7	2 750	560	35,5	39 000	27 000	0,014	**108-TVH**
9	26	8	3 950	810	51	33 500	24 100	0,022	**129-TVH**
10	30	9	5 700	1 190	76	29 500	22 100	0,034	**1200-TVH**
	30	14	5 700	1 190	76	16 500	–	0,053	**2200-2RS-TVH**
	30	14	8 800	1 740	111	25 500	26 000	0,045	**2200-TVH**
12	32	10	5 700	1 270	80	28 000	21 300	0,041	**1201-TVH**
	32	14	5 700	1 270	80	14 700	–	0,058	**2201-2RS-TVH**
	32	14	9 400	1 940	123	24 200	23 300	0,05	**2201-TVH**
	37	12	9 800	2 160	137	22 300	16 200	0,067	**1301-TVH**
15	35	11	7 700	1 750	111	23 800	19 100	0,048	**1202-TVH**
	35	14	7 700	1 750	111	13 300	–	0,061	**2202-2RS-TVH**
	35	14	9 600	2 100	133	22 200	19 600	0,057	**2202-TVH**
	42	17	9 800	2 280	145	11 200	–	0,114	**2302-2RS-TVH**
	42	17	17 400	3 850	244	17 200	15 600	0,111	**2302-TVH**
17	40	12	8 100	2 010	128	21 800	17 400	0,073	**1203-TVH**
	40	16	8 100	2 010	128	11 300	–	0,098	**2203-2RS-TVH**
	40	16	11 800	2 750	176	19 100	17 400	0,088	**2203-TVH**
	47	14	12 900	3 200	202	17 800	13 300	0,065	**1303-TVH**
	47	19	12 900	3 200	202	10 100	–	0,175	**2303-2RS-TVH**
	47	19	13 900	3 200	203	17 000	14 900	0,155	**2303-TVH**
20	47	14	10 100	2 600	166	18 100	15 300	0,116	**1204-K-TVH-C3**
	47	14	10 100	2 600	166	18 100	15 300	0,118	**1204-TVH**
	47	18	10 100	2 600	166	9 400	–	0,151	**2204-2RS-TVH**
	47	18	14 700	3 550	225	16 300	15 600	0,134	**2204-TVH**
	52	15	12 700	3 350	212	16 100	11 600	0,163	**1304-TVH**
	52	21	12 700	3 350	212	8 500	–	0,23	**2304-2RS-TVH**
	52	21	17 600	4 300	270	15 000	13 800	0,206	**2304-TVH**

medias *https://www.schaeffler.de/std/1F9A*

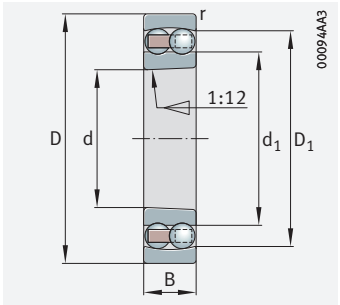

Tapered bore

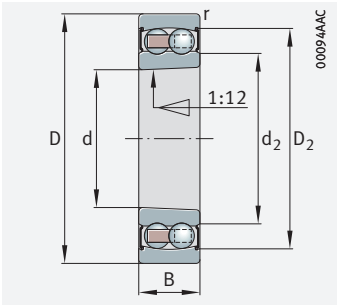

Tapered bore with seal 2RS

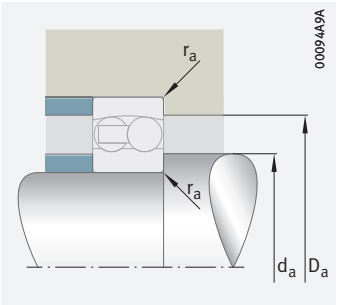

Mounting dimensions

Dimensions						Mounting dimensions			Calculation factors			
d	r	D_1	D_2	d_1	d_2	d_a	D_a	r_a	e	Y_1	Y_2	Y_0
	min.	≈	≈	≈	≈	min.	max.	max.				
5	0,3	14,5	–	10,1	–	7,4	16,6	0,3	0,35	1,82	2,82	1,91
6	0,3	14,7	–	10,1	–	8,4	16,6	0,3	0,35	1,82	2,82	1,91
7	0,3	17,1	–	12,4	–	9,4	19,6	0,3	0,33	1,92	2,97	2,01
8	0,3	16,8	–	12,4	–	10,6	19,4	0,3	0,33	1,92	2,97	2,01
9	0,6	20	–	14,5	–	13,2	21,8	0,6	0,32	1,95	3,01	2,04
10	0,6	23,3	–	16,3	–	14,2	25,8	0,6	0,32	1,95	3,02	2,05
	0,6	–	25,2	–	14,1	14,2	25,8	0,6	0,32	1,95	3,02	2,05
	0,6	24	–	15,1	–	14,2	25,8	0,6	0,58	1,09	1,69	1,14
12	0,6	25,1	–	18,2	–	16,2	27,8	0,6	0,37	1,69	2,62	1,77
	0,6	–	27,2	–	16,2	16,2	27,8	0,6	0,37	1,69	2,62	1,77
	0,6	25,9	–	17,1	–	16,2	27,8	0,6	0,53	1,2	1,85	1,25
	1	29,7	–	20,3	–	17,6	31,4	1	0,35	1,8	2,79	1,89
15	0,6	28,8	–	20,2	–	19,2	30,8	0,6	0,34	1,86	2,88	1,95
	0,6	–	30,2	–	19	19,2	30,8	0,6	0,34	1,86	2,88	1,95
	0,6	29,2	–	20,3	–	19,2	30,8	0,6	0,46	1,37	2,13	1,44
	1	–	34,9	–	23,9	20,6	36,4	1	0,35	1,79	2,77	1,88
	1	34,4	–	22,5	–	20,6	36,4	1	0,51	1,23	1,91	1,29
17	0,6	32	–	23,7	–	21,2	35,8	0,6	0,33	1,93	2,99	2,03
	0,6	–	34,3	–	21,6	21,2	35,8	0,6	0,33	1,93	2,99	2,03
	0,6	33,9	–	23,9	–	21,2	35,8	0,6	0,46	1,37	2,12	1,43
	1	37	–	26,7	–	22,6	41,4	1	0,32	1,94	3	2,03
	1	–	39,4	–	23,9	22,6	41,4	1	0,32	1,94	3	2,03
	1	37,3	–	26,2	–	22,6	41,4	1	0,53	1,19	1,85	1,25
20	1	37,8	–	29,2	–	25,6	41,4	1	0,28	2,24	3,46	2,34
	1	37,8	–	29,2	–	25,6	41,4	1	0,28	2,24	3,46	2,34
	1	–	41	–	25,8	25,6	41,4	1	0,28	2,24	3,46	2,34
	1	39,1	–	28	–	25,6	41,4	1	0,44	1,45	2,24	1,51
	1,1	41,5	–	31,6	–	27	45	1	0,29	2,17	3,35	2,27
	1,1	–	44,4	–	27,2	27	45	1	0,29	2,17	3,35	2,27
	1,1	41,2	–	29,1	–	27	45	1	0,51	1,23	1,9	1,29

Self-aligning ball bearings

With cylindrical or tapered bore

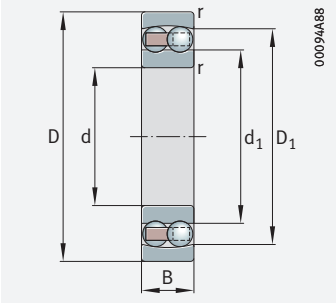

Cylindrical bore

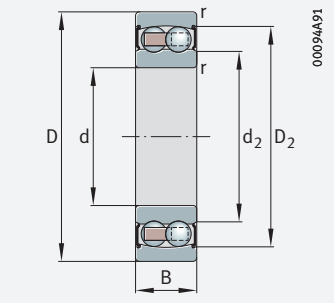

Cylindrical bore with seal 2RS

d = 25 – 35 mm

Main dimensions			Basic load ratings		Fatigue limit load	Limiting speed	Speed rating	Mass	Designation
d	D	B	dyn. C_r	stat. C_{0r}	C_{ur}	n_G	$n_{\vartheta r}$	m	➤*381|1.12* ➤*381|1.13*
			N	N	N	min^{-1}	min^{-1}	≈ kg	
25	52	15	12 300	3 300	209	15 500	13 400	0,135	**1205-K-TVH-C3**
	52	15	12 300	3 300	209	15 500	13 400	0,138	**1205-TVH**
	52	18	12 300	3 300	209	8 100	–	0,161	**2205-2RS-TVH**
	52	18	12 300	3 300	209	8 100	–	0,157	**2205-K-2RS-TVH-C3**
	52	18	17 300	4 450	285	14 400	13 400	0,152	**2205-K-TVH-C3**
	52	18	17 300	4 450	285	14 400	13 400	0,156	**2205-TVH**
	62	17	18 300	5 000	320	12 900	10 000	0,254	**1305-K-TVH-C3**
	62	17	18 300	5 000	320	12 900	10 000	0,258	**1305-TVH**
	62	24	18 300	5 000	320	7 000	–	0,367	**2305-2RS-TVH**
	62	24	25 000	6 600	420	12 200	11 900	0,328	**2305-K-TVH-C3**
	62	24	25 000	6 600	420	12 200	11 900	0,335	**2305-TVH**
30	62	16	15 900	4 650	295	13 100	11 400	0,217	**1206-K-TVH-C3**
	62	16	15 900	4 650	295	13 100	11 400	0,221	**1206-TVH**
	62	20	15 900	4 650	295	6 800	–	0,274	**2206-2RS-TVH**
	62	20	15 900	4 650	295	6 800	–	0,268	**2206-K-2RS-TVH-C3**
	62	20	26 000	6 900	440	11 500	11 400	0,246	**2206-K-TVH-C3**
	62	20	26 000	6 900	440	11 500	11 400	0,252	**2206-TVH**
	72	19	21 700	6 300	400	11 100	8 700	0,379	**1306-K-TVH-C3**
	72	19	21 700	6 300	400	11 100	8 700	0,384	**1306-TVH**
	72	27	21 700	6 300	400	5 900	–	0,554	**2306-2RS-TVH**
	72	27	32 500	8 800	560	10 200	10 400	0,476	**2306-K-TVH-C3**
	72	27	32 500	8 800	560	10 200	10 400	0,488	**2306-TVH**
35	72	17	16 000	5 100	325	11 600	9 800	0,319	**1207-K-TVH-C3**
	72	17	16 000	5 100	325	11 600	9 800	0,324	**1207-TVH**
	72	23	16 000	5 100	325	5 600	–	0,442	**2207-2RS-TVH**
	72	23	16 000	5 100	325	5 600	–	0,432	**2207-K-2RS-TVH-C3**
	72	23	33 000	9 000	570	9 800	10 300	0,38	**2207-K-TVH-C3**
	72	23	33 000	9 000	570	9 800	10 300	0,389	**2207-TVH**
	80	21	25 500	7 900	500	9 700	7 800	0,5	**1307-K-TVH-C3**
	80	21	25 500	7 900	500	9 700	7 800	0,507	**1307-TVH**
	80	31	25 500	7 900	500	5 200	–	0,744	**2307-2RS-TVH**
	80	31	40 500	11 200	710	8 900	9 800	0,657	**2307-K-TVH-C3**
	80	31	40 500	11 200	710	8 900	9 800	0,675	**2307-TVH**

medias *https://www.schaeffler.de/std/1F9A*

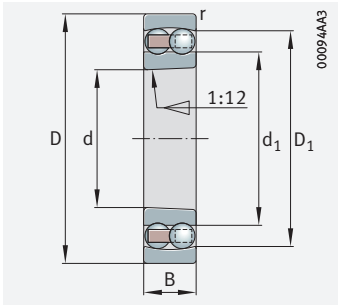

Tapered bore

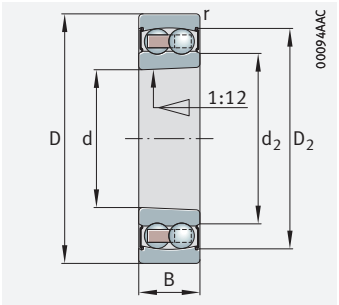

Tapered bore with seal 2RS

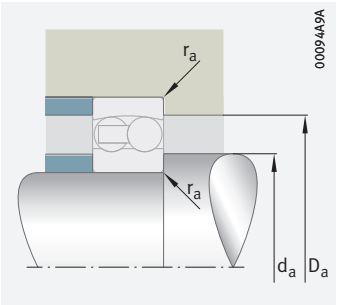

Mounting dimensions

Dimensions						Mounting dimensions			Calculation factors			
d	r	D_1	D_2	d_1	d_2	d_a	D_a	r_a	e	Y_1	Y_2	Y_0
	min.	≈	≈	≈	≈	min.	max.	max.				
25	1	43,6	–	33,3	–	30,6	46,4	1	0,27	2,37	3,66	2,48
	1	43,6	–	33,3	–	30,6	46,4	1	0,27	2,37	3,66	2,48
	1	–	45,3	–	30,7	30,6	46,4	1	0,27	2,37	3,66	2,48
	1	–	45,3	–	30,7	30,6	46,4	1	0,27	2,37	3,66	2,48
	1	44,4	–	32,3	–	30,6	46,4	1	0,35	1,78	2,75	1,86
	1	44,4	–	32,3	–	30,6	46,4	1	0,35	1,78	2,75	1,86
	1,1	50,4	–	38,1	–	32	55	1	0,28	2,29	3,54	2,4
	1,1	50,4	–	38,1	–	32	55	1	0,28	2,29	3,54	2,4
	1,1	–	52,4	–	33,5	32	55	1	0,28	2,29	3,54	2,4
	1,1	49,9	–	35,5	–	32	55	1	0,48	1,32	2,04	1,38
	1,1	49,9	–	35,5	–	32	55	1	0,48	1,32	2,04	1,38
30	1	51,6	–	40,1	–	35,6	56,4	1	0,25	2,53	3,91	2,65
	1	51,6	–	40,1	–	35,6	56,4	1	0,25	2,53	3,91	2,65
	1	–	53,3	–	37,3	35,6	56,4	1	0,25	2,53	3,91	2,65
	1	–	53,3	–	37,3	35,6	56,4	1	0,25	2,53	3,91	2,65
	1	53,7	–	38,5	–	35,6	56,4	1	0,3	2,13	3,29	2,23
	1	53,7	–	38,5	–	35,6	56,4	1	0,3	2,13	3,29	2,23
	1,1	58,9	–	45,1	–	37	65	1	0,26	2,39	3,71	2,51
	1,1	58,9	–	45	–	37	65	1	0,26	2,39	3,71	2,51
	1,1	–	62,3	–	40,6	37	65	1	0,26	2,39	3,71	2,51
	1,1	58,8	–	41,5	–	37	65	1	0,45	1,4	2,17	1,47
	1,1	58,8	–	41,5	–	37	65	1	0,45	1,4	2,17	1,47
35	1,1	59,1	–	47,7	–	42	65	1	0,22	2,8	4,34	2,94
	1,1	59,1	–	47,7	–	42	65	1	0,22	2,8	4,34	2,94
	1,1	–	63,4	–	43,5	42	65	1	0,22	2,8	4,34	2,94
	1,1	–	63,4	–	43,5	42	65	1	0,22	2,8	4,34	2,94
	1,1	62,4	–	45,7	–	42	65	1	0,3	2,13	3,29	2,23
	1,1	62,4	–	45,7	–	42	65	1	0,3	2,13	3,29	2,23
	1,5	70,1	–	51,3	–	44	71	1,5	0,26	2,47	3,82	2,59
	1,5	70,1	–	51,3	–	44	71	1,5	0,26	2,47	3,82	2,59
	1,5	–	68,4	–	44,9	44	71	1,5	0,26	2,47	3,82	2,59
	1,5	66,1	–	46,9	–	44	71	1,5	0,47	1,35	2,1	1,42
	1,5	66,1	–	46,9	–	44	71	1,5	0,47	1,35	2,1	1,42

Self-aligning ball bearings

With cylindrical or tapered bore

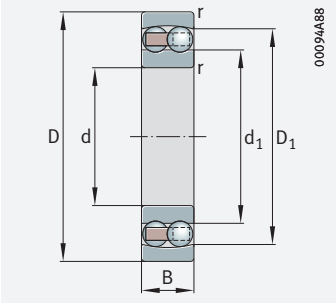

Cylindrical bore

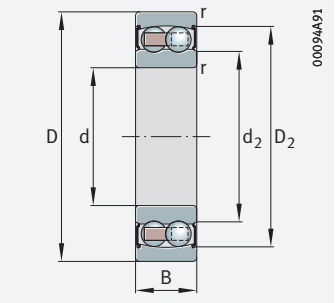

Cylindrical bore with seal 2RS

d = 40 – 50 mm

Main dimensions			Basic load ratings		Fatigue limit load	Limiting speed	Speed rating	Mass	Designation
d	D	B	dyn. C_r	stat. C_{0r}	C_{ur}	n_G	$n_{\vartheta r}$	m	➤*381|1.12* ➤*381|1.13*
			N	N	N	min^{-1}	min^{-1}	≈ kg	
40	80	18	19 400	6 500	415	10 100	8 600	0,408	**1208-K-TVH-C3**
	80	18	19 400	6 500	415	10 100	8 600	0,414	**1208-TVH**
	80	23	19 400	6 500	415	4 950	–	0,528	**2208-2RS-TVH**
	80	23	19 400	6 500	415	4 950	–	0,517	**2208-K-2RS-TVH-C3**
	80	23	32 500	9 500	600	8 900	8 700	0,465	**2208-K-TVH-C3**
	80	23	32 500	9 500	600	8 900	8 700	0,476	**2208-TVH**
	90	23	30 000	9 700	610	8 600	7 200	0,698	**1308-K-TVH-C3**
	90	23	30 000	9 700	610	8 600	7 200	0,708	**1308-TVH**
	90	33	30 000	9 700	610	4 650	–	1,01	**2308-2RS-TVH**
	90	33	46 000	13 500	860	7 900	8 700	0,899	**2308-K-TVH-C3**
	90	33	46 000	13 500	860	7 900	8 700	0,922	**2308-TVH**
45	85	19	22 000	7 300	465	9 300	8 200	0,454	**1209-K-TVH-C3**
	85	19	22 000	7 300	465	9 300	8 200	0,462	**1209-TVH**
	85	23	22 000	7 300	465	4 650	–	0,548	**2209-2RS-TVH**
	85	23	22 000	7 300	465	4 650	–	0,535	**2209-K-2RS-TVH-C3**
	85	23	28 500	9 000	570	8 600	7 800	0,505	**2209-K-TVH-C3**
	85	23	28 500	9 000	570	8 600	7 800	0,517	**2209-TVH**
	100	25	38 500	12 700	810	7 500	6 700	0,939	**1309-K-TVH-C3**
	100	25	38 500	12 700	810	7 500	6 700	0,953	**1309-TVH**
	100	36	38 500	12 700	810	4 200	–	1,34	**2309-2RS-TVH**
	100	36	55 000	16 600	1 060	7 000	8 000	1,19	**2309-K-TVH-C3**
	100	36	55 000	16 600	1 060	7 000	8 000	1,22	**2309-TVH**
50	90	20	22 900	8 100	520	8 700	7 700	0,516	**1210-K-TVH-C3**
	90	20	22 900	8 100	520	8 700	7 700	0,526	**1210-TVH**
	90	23	22 900	8 100	520	4 250	–	0,606	**2210-2RS-TVH**
	90	23	22 900	8 100	520	4 250	–	0,593	**2210-K-2RS-TVH-C3**
	90	23	28 500	9 500	600	8 100	7 100	0,543	**2210-K-TVH-C3**
	90	23	28 500	9 500	600	8 100	7 100	0,556	**2210-TVH**
	110	27	42 000	14 200	900	6 900	6 300	1,19	**1310-K-TVH-C3**
	110	27	42 000	14 200	900	6 900	6 300	1,21	**1310-TVH**
	110	40	42 000	14 200	900	3 750	–	1,82	**2310-2RS-TVH**
	110	40	66 000	20 200	1 280	6 300	7 600	1,64	**2310-TVH**

medias *https://www.schaeffler.de/std/1F9A*

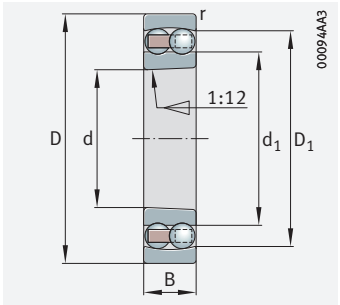

Tapered bore

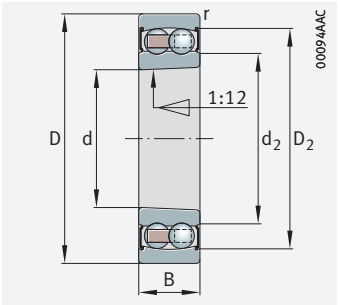

Tapered bore with seal 2RS

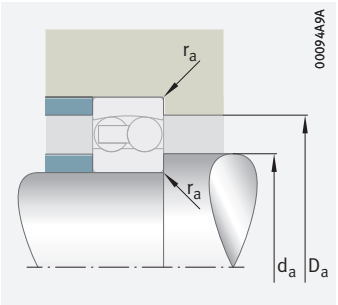

Mounting dimensions

Dimensions						Mounting dimensions			Calculation factors			
d	r	D_1	D_2	d_1	d_2	d_a	D_a	r_a	e	Y_1	Y_2	Y_0
	min.	≈	≈	≈	≈	min.	max.	max.				
40	1,1	67,3	–	54	–	47	73	1	0,22	2,9	4,49	3,04
	1,1	67,3	–	54	–	47	73	1	0,22	2,9	4,49	3,04
	1,1	–	70,3	–	49,2	47	73	1	0,22	2,9	4,49	3,04
	1,1	–	70,3	–	49,2	47	73	1	0,22	2,9	4,49	3,04
	1,1	70,2	–	52,5	–	47	73	1	0,26	2,43	3,76	2,54
	1,1	70,2	–	52,5	–	47	73	1	0,26	2,43	3,76	2,54
	1,5	74,7	–	57,8	–	49	81	1,5	0,25	2,52	3,9	2,64
	1,5	74,7	–	57,8	–	49	81	1,5	0,25	2,52	3,9	2,64
	1,5	–	77,3	–	51	49	81	1,5	0,25	2,52	3,9	2,64
	1,5	74,5	–	53,7	–	49	81	1,5	0,43	1,45	2,25	1,52
	1,5	74,5	–	53,7	–	49	81	1,5	0,43	1,45	2,25	1,52
45	1,1	72,1	–	57,7	–	52	78	1	0,21	3,04	4,7	3,18
	1,1	72,1	–	57,7	–	52	78	1	0,21	3,04	4,7	3,18
	1,1	–	76	–	53,8	52	78	1	0,21	3,04	4,7	3,18
	1,1	–	76	–	53,8	52	78	1	0,21	3,04	4,7	3,18
	1,1	75,4	–	59	–	52	78	1	0,26	2,43	3,76	2,54
	1,1	75,4	–	59	–	52	78	1	0,26	2,43	3,76	2,54
	1,5	83,5	–	64,1	–	54	91	1,5	0,25	2,5	3,87	2,62
	1,5	83,5	–	64,1	–	54	91	1,5	0,25	2,5	3,87	2,62
	1,5	–	85,8	–	57,5	54	91	1,5	0,25	2,5	3,87	2,62
	1,5	83,6	–	60,1	–	54	91	1,5	0,43	1,48	2,29	1,55
	1,5	83,6	–	60,1	–	54	91	1,5	0,43	1,48	2,29	1,55
50	1,1	77,1	–	62,7	–	57	83	1	0,2	3,17	4,9	3,32
	1,1	77,1	–	62,7	–	57	83	1	0,2	3,17	4,9	3,32
	1,1	–	79	–	60,5	57	83	1	0,2	3,17	4,9	3,32
	1,1	–	79	–	60,5	57	83	1	0,2	3,17	4,9	3,32
	1,1	80,5	–	64	–	57	83	1	0,24	2,61	4,05	2,74
	1,1	80,5	–	64	–	57	83	1	0,24	2,61	4,05	2,74
	2	91,7	–	71,2	–	61	99	2	0,24	2,6	4,03	2,73
	2	91,7	–	71,2	–	61	99	2	0,24	2,6	4,03	2,73
	2	–	95,1	–	65,9	61	99	2	0,24	2,6	4,03	2,73
	2	91,4	–	65,9	–	61	99	2	0,43	1,47	2,27	1,54

Self-aligning ball bearings

With cylindrical or tapered bore

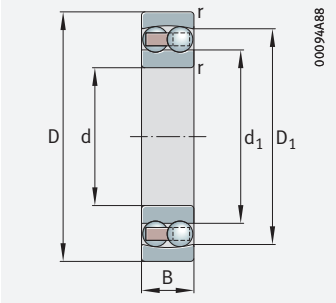

Cylindrical bore

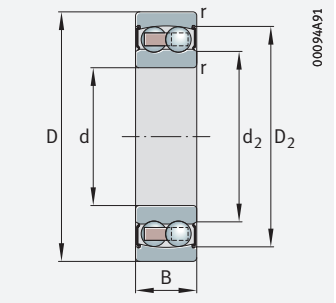

Cylindrical bore with seal 2RS

d = 55 – 65 mm

Main dimensions			Basic load ratings		Fatigue limit load	Limiting speed	Speed rating	Mass	Designation
d	D	B	dyn. C_r	stat. C_{0r}	C_{ur}	n_G	$n_{\vartheta r}$	m	➤*381|1.12* ➤*381|1.13*
			N	N	N	min^{-1}	min^{-1}	≈ kg	
55	100	21	27 000	10 000	630	7 700	6 900	0,682	**1211-K-TVH-C3**
	100	21	27 000	10 000	630	7 700	6 900	0,693	**1211-TVH**
	100	25	27 000	10 000	630	3 850	–	0,825	**2211-2RS-TVH**
	100	25	27 000	10 000	630	3 850	–	0,808	**2211-K-2RS-TVH-C3**
	100	25	39 000	12 500	790	7 000	6 700	0,73	**2211-K-TVH-C3**
	100	25	39 000	12 500	790	7 000	6 700	0,746	**2211-TVH**
	120	29	52 000	17 900	1 130	6 100	5 800	1,55	**1311-K-TVH-C3**
	120	29	52 000	17 900	1 130	6 100	5 800	1,57	**1311-TVH**
	120	43	52 000	17 900	1 130	3 450	–	2,28	**2311-2RS-TVH**
	120	43	77 000	24 000	1 520	5 700	7 100	2,02	**2311-K-TVH-C3**
	120	43	77 000	24 000	1 520	5 700	7 100	2,07	**2311-TVH**
60	110	22	30 500	11 500	730	6 900	6 300	0,88	**1212-K-TVH-C3**
	110	22	30 500	11 500	730	6 900	6 300	0,894	**1212-TVH**
	110	28	30 500	11 500	730	3 450	–	1,13	**2212-2RS-TVH**
	110	28	30 500	11 500	730	3 450	–	1,13	**2212-K-2RS-TVH-C3**
	110	28	48 000	16 500	1 040	6 300	6 400	1,03	**2212-K-TVH-C3**
	110	28	48 000	16 500	1 040	6 300	6 400	1,06	**2212-TVH**
	130	31	58 000	20 800	1 320	5 500	5 200	1,94	**1312-K-TVH-C3**
	130	31	58 000	20 800	1 320	5 500	5 200	1,97	**1312-TVH**
	130	46	89 000	28 000	1 790	5 200	6 700	2,52	**2312-K-TVH-C3**
	130	46	89 000	28 000	1 790	5 200	6 700	2,58	**2312-TVH**
65	120	23	31 000	12 500	790	6 500	5 800	1,13	**1213-K-TVH-C3**
	120	23	31 000	12 500	790	6 500	5 800	1,14	**1213-TVH**
	120	31	31 000	12 500	790	3 150	–	1,53	**2213-2RS-TVH**
	120	31	31 000	12 500	790	3 150	–	1,5	**2213-K-2RS-TVH-C3**
	120	31	58 000	19 200	1 220	5 600	6 200	1,33	**2213-K-TVH-C3**
	120	31	58 000	19 200	1 220	5 600	6 200	1,36	**2213-TVH**
	140	33	63 000	22 900	1 420	5 200	5 100	2,41	**1313-K-TVH-C3**
	140	33	63 000	22 900	1 420	5 200	5 100	2,44	**1313-TVH**
	140	48	98 000	32 500	2 040	4 750	6 100	3,16	**2313-K-TVH-C3**
	140	48	98 000	32 500	2 040	4 750	6 100	3,23	**2313-TVH**

medias *https://www.schaeffler.de/std/1F9A*

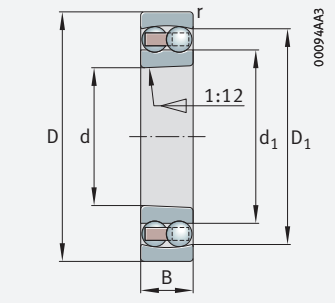

Tapered bore

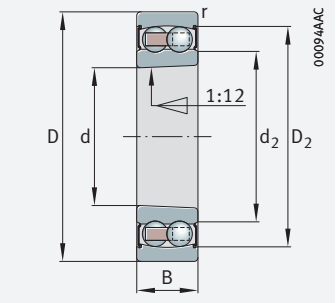

Tapered bore with seal 2RS

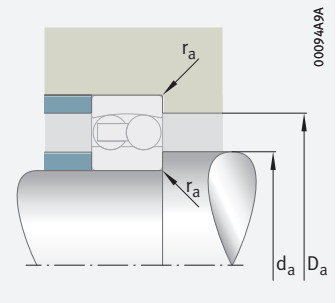

Mounting dimensions

Dimensions						Mounting dimensions			Calculation factors			
d	r	D_1	D_2	d_1	d_2	d_a	D_a	r_a	e	Y_1	Y_2	Y_0
	min.	≈	≈	≈	≈	min.	max.	max.				
55	1,5	86,4	–	69,5	–	64	91	1,5	0,19	3,31	5,12	3,47
	1,5	86,4	–	69,5	–	64	91	1,5	0,19	3,31	5,12	3,47
	1,5	–	88,2	–	68	64	91	1,5	0,19	3,31	5,12	3,47
	1,5	–	88,2	–	68	64	91	1,5	0,19	3,31	5,12	3,47
	1,5	89,8	–	69,6	–	64	91	1,5	0,22	2,92	4,52	3,06
	1,5	89,8	–	69,6	–	64	91	1,5	0,22	2,92	4,52	3,06
	2	101	–	78	–	66	109	2	0,24	2,66	4,12	2,79
	2	101	–	78	–	66	109	2	0,24	2,66	4,12	2,79
	2	–	106,4	–	70,5	66	109	2	0,24	2,66	4,12	2,79
	2	100,2	–	71,7	–	66	109	2	0,42	1,51	2,33	1,58
	2	100,2	–	71,7	–	66	109	2	0,42	1,51	2,33	1,58
60	1,5	95,2	–	78	–	69	101	1,5	0,18	3,47	5,37	3,64
	1,5	95,2	–	78	–	69	101	1,5	0,18	3,47	5,37	3,64
	1,5	–	99,5	–	70,4	69	101	1,5	0,18	3,47	5,37	3,64
	1,5	–	99,5	–	70,4	69	101	1,5	0,18	3,47	5,37	3,64
	1,5	98,2	–	76,6	–	69	101	1,5	0,23	2,69	4,16	2,82
	1,5	98,2	–	76,6	–	69	101	1,5	0,23	2,69	4,16	2,82
	2,1	112,2	–	87	–	72	118	2,1	0,23	2,77	4,28	2,9
	2,1	112,2	–	87	–	72	118	2,1	0,23	2,77	4,28	2,9
	2,1	108,5	–	77	–	72	118	2,1	0,41	1,55	2,4	1,62
	2,1	108,5	–	77	–	72	118	2,1	0,41	1,55	2,4	1,62
65	1,5	102,7	–	85,2	–	74	111	1,5	0,18	3,57	5,52	3,74
	1,5	102,7	–	85,2	–	74	111	1,5	0,18	3,57	5,52	3,74
	1,5	–	107,8	–	78	74	111	1,5	0,18	3,57	5,52	3,74
	1,5	–	107,8	–	78	74	111	1,5	0,18	3,57	5,52	3,74
	1,5	106,9	–	82,4	–	74	111	1,5	0,23	2,78	4,31	2,92
	1,5	106,9	–	82,4	–	74	111	1,5	0,23	2,78	4,31	2,92
	2,1	118,2	–	92,7	–	77	128	2,1	0,23	2,75	4,26	2,88
	2,1	118,2	–	92,7	–	77	128	2,1	0,23	2,75	4,26	2,88
	2,1	118,3	–	85,6	–	77	128	2,1	0,39	1,62	2,51	1,7
	2,1	118,3	–	85,6	–	77	128	2,1	0,39	1,62	2,51	1,7

Self-aligning ball bearings

With cylindrical or tapered bore

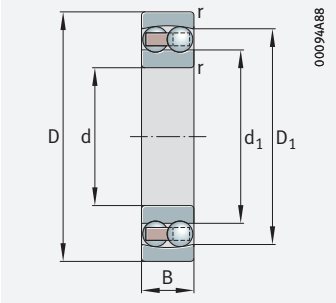

Cylindrical bore

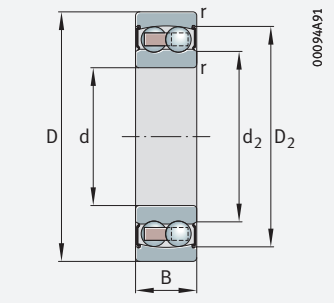

Cylindrical bore with seal 2RS

d = 70 – 85 mm

Main dimensions			Basic load ratings		Fatigue limit load	Limiting speed	Speed rating	Mass	Designation
d	D	B	dyn. C_r	stat. C_{0r}	C_{ur}	n_G	$n_{\vartheta r}$	m	➤*381|1.12* ➤*381|1.13*
			N	N	N	min^{-1}	min^{-1}	≈ kg	
70	125	24	35 000	13 800	880	6 200	5 900	1,23	**1214-K-TVH-C3**
	125	24	35 000	13 800	880	6 200	5 900	1,25	**1214-TVH**
	125	31	35 000	13 800	880	3 050	–	1,59	**2214-2RS-TVH**
	125	31	44 000	17 100	1 080	8 800	5 900	1,69	**2214-M**
	150	35	75 000	27 500	1 670	7 200	4 950	3,11	**1314-M**
	150	51	112 000	37 500	2 270	6 600	5 800	4,38	**2314-M**
75	130	25	39 000	15 700	980	5 700	5 500	1,32	**1215-K-TVH-C3**
	130	25	39 000	15 700	980	5 700	5 500	1,34	**1215-TVH**
	130	31	44 500	17 800	1 110	5 600	5 600	1,6	**2215-K-TVH-C3**
	130	31	44 500	17 800	1 110	5 600	5 600	1,6	**2215-TVH**
	160	37	80 000	30 000	1 740	6 700	4 750	3,52	**1315-K-M-C3**
	160	37	80 000	30 000	1 740	6 700	4 750	3,56	**1315-M**
	160	55	125 000	42 500	2 490	6 100	5 600	5,21	**2315-K-M-C3**
	160	55	125 000	42 500	2 490	6 100	5 600	5,33	**2315-M**
80	140	26	40 000	17 000	1 020	5 300	5 100	1,62	**1216-K-TVH-C3**
	140	26	40 000	17 000	1 020	5 300	5 100	1,65	**1216-TVH**
	140	33	49 500	19 900	1 210	5 300	5 400	1,97	**2216-K-TVH-C3**
	140	33	49 500	19 900	1 210	5 300	5 400	2,01	**2216-TVH**
	170	39	89 000	33 000	1 870	6 200	4 500	4,5	**1316-K-M-C3**
	170	39	89 000	33 000	1 870	6 200	4 500	4,56	**1316-M**
	170	58	139 000	48 500	2 750	5 700	5 400	6,05	**2316-K-M-C3**
	170	58	139 000	48 500	2 750	5 700	5 400	6,2	**2316-M**
85	150	28	49 500	20 800	1 210	4 900	4 950	2,03	**1217-K-TVH-C3**
	150	28	49 500	20 800	1 210	4 900	4 950	2,07	**1217-TVH**
	150	36	59 000	23 600	1 380	7 200	5 200	2,73	**2217-K-M-C3**
	150	36	59 000	23 600	1 380	7 200	5 200	2,79	**2217-M**
	180	41	99 000	38 000	2 070	5 800	4 300	5,32	**1317-K-M-C3**
	180	41	99 000	38 000	2 070	5 800	4 300	5,39	**1317-M**
	180	60	143 000	51 000	2 850	5 400	5 200	7,04	**2317-K-M-C3**
	180	60	143 000	51 000	2 850	5 400	5 200	7,2	**2317-M**

medias *https://www.schaeffler.de/std/1F9A*

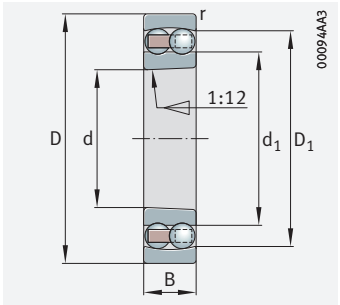

Tapered bore

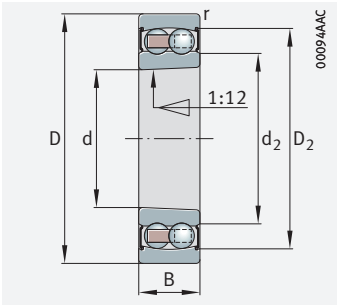

Tapered bore with seal 2RS

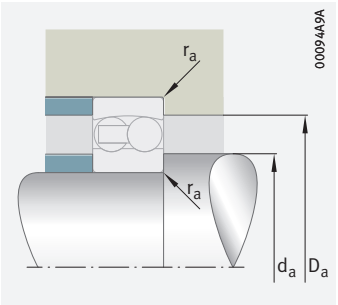

Mounting dimensions

Dimensions						Mounting dimensions			Calculation factors			
d	r	D_1	D_2	d_1	d_2	d_a	D_a	r_a	e	Y_1	Y_2	Y_0
	min.	≈	≈	≈	≈	min.	max.	max.				
70	1,5	106,1	–	87,2	–	79	116	1,5	0,19	3,36	5,21	3,52
	1,5	106,1	–	87,2	–	79	116	1,5	0,19	3,36	5,21	3,52
	1,5	–	110,8	–	84,7	79	116	1,5	0,19	3,36	5,21	3,52
	1,5	108,9	–	87,6	–	79	116	1,5	0,27	2,34	3,62	2,45
	2,1	126,4	–	97,7	–	82	138	2,1	0,23	2,79	4,32	2,93
	2,1	127,2	–	91,9	–	82	138	2,1	0,38	1,65	2,55	1,73
75	1,5	113,6	–	93,7	–	84	121	1,5	0,19	3,32	5,15	3,48
	1,5	113,6	–	93,7	–	84	121	1,5	0,19	3,32	5,15	3,48
	1,5	114,3	–	93,3	–	84	121	1,5	0,26	2,47	3,82	2,59
	1,5	114,3	–	93,3	–	84	121	1,5	0,26	2,47	3,82	2,59
	2,1	134,8	–	104,8	–	87	148	2,1	0,23	2,77	4,29	2,9
	2,1	134,8	–	104,8	–	87	148	2,1	0,23	2,77	4,29	2,9
	2,1	135,2	–	100,5	–	87	148	2,1	0,38	1,64	2,54	1,72
	2,1	135,2	–	100,5	–	87	148	2,1	0,38	1,64	2,54	1,72
80	2	122,1	–	101,8	–	91	129	2	0,16	3,9	6,03	4,08
	2	122,1	–	102	–	91	129	2	0,16	3,9	6,03	4,08
	2	121	–	99,2	–	91	129	2	0,25	2,48	3,84	2,6
	2	121	–	99,2	–	91	129	2	0,25	2,48	3,84	2,6
	2,1	144,3	–	110,6	–	92	158	2,1	0,22	2,87	4,44	3
	2,1	144,3	–	110,6	–	92	158	2,1	0,22	2,87	4,44	3
	2,1	144,1	–	107,6	–	92	158	2,1	0,37	1,7	2,62	1,78
	2,1	144,1	–	107,6	–	92	158	2,1	0,37	1,7	2,62	1,78
85	2	130,4	–	107,5	–	96	139	2	0,17	3,73	5,78	3,91
	2	130,4	–	107,5	–	96	139	2	0,17	3,73	5,78	3,91
	2	130	–	105,2	–	96	139	2	0,26	2,46	3,81	2,58
	2	130	–	105,2	–	96	139	2	0,26	2,46	3,81	2,58
	3	151,9	–	117,2	–	99	166	2,5	0,22	2,88	4,46	3,02
	3	151,9	–	117,2	–	99	166	2,5	0,22	2,88	4,46	3,02
	3	152,2	–	114,4	–	99	166	2,5	0,37	1,68	2,61	1,76
	3	152,2	–	114,4	–	99	166	2,5	0,37	1,68	2,61	1,76

Self-aligning ball bearings

With cylindrical or tapered bore

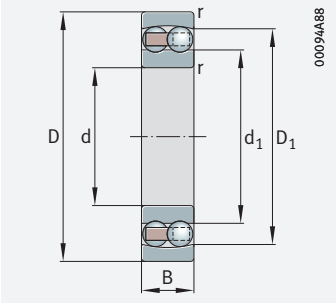

Cylindrical bore

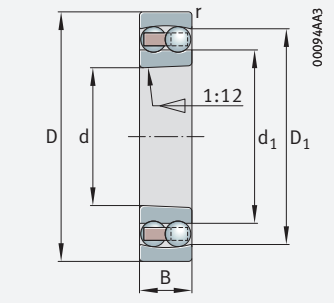

Tapered bore

d = 90 – 105 mm

Main dimensions			Basic load ratings		Fatigue limit load	Limiting speed	Speed rating	Mass	Designation
d	D	B	dyn. C_r	stat. C_{0r}	C_{ur}	n_G	$n_{\vartheta r}$	m	➤*381|1.12* ➤*381|1.13*
			N	N	N	min^{-1}	min^{-1}	≈ kg	
90	160	30	57 000	23 500	1 330	4 550	4 850	2,48	**1218-K-TVH-C3**
	160	30	57 000	23 500	1 330	4 550	4 850	2,52	**1218-TVH**
	160	40	71 000	28 500	1 630	4 400	5 200	3,18	**2218-K-TVH-C3**
	160	40	71 000	28 500	1 630	4 400	5 200	3,18	**2218-TVH**
	190	43	109 000	43 000	2 300	5 500	4 200	6,27	**1318-K-M-C3**
	190	43	109 000	43 000	2 300	5 500	4 200	6,35	**1318-M**
	190	64	156 000	58 000	3 100	5 100	5 000	8,38	**2318-K-M-C3**
	190	64	156 000	58 000	3 100	5 100	5 000	8,58	**2318-M**
95	170	32	64 000	27 000	1 490	6 300	4 600	3,28	**1219-K-M-C3**
	170	32	64 000	27 000	1 490	6 300	4 600	3,32	**1219-M**
	170	43	84 000	34 500	1 890	6 100	5 000	4,24	**2219-K-M-C3**
	170	43	84 000	34 500	1 890	6 100	5 000	4,33	**2219-M**
	200	45	134 000	51 000	2 650	5 100	4 050	7,2	**1319-K-M-C3**
	200	45	134 000	51 000	2 650	5 100	4 050	7,29	**1319-M**
	200	67	167 000	64 000	3 350	4 800	4 750	9,97	**2319-K-M-C3**
	200	67	167 000	64 000	3 350	4 800	4 750	10,2	**2319-M**
100	180	34	70 000	29 500	1 590	6 000	4 500	3,94	**1220-K-M-C3**
	180	34	70 000	29 500	1 590	6 000	4 500	3,99	**1220-M**
	180	46	98 000	40 500	2 180	5 700	4 900	5,1	**2220-K-M-C3**
	180	46	98 000	40 500	2 180	5 700	4 900	5,21	**2220-M**
	215	47	145 000	57 000	2 900	4 700	3 850	8,95	**1320-K-M-C3**
	215	47	145 000	57 000	2 900	4 700	3 850	9,06	**1320-M**
	215	73	196 000	79 000	4 000	4 300	4 350	12,7	**2320-K-M-C3**
	215	73	196 000	79 000	4 000	4 300	4 350	12,9	**2320-M**
105	190	36	75 000	32 500	1 690	5 700	4 350	4,75	**1221-M**
	225	49	158 000	64 000	3 150	4 450	3 750	10,3	**1321-M**

medias *https://www.schaeffler.de/std/1F9A*

[1] The ball projection must be taken into consideration when designing the adjacent construction.

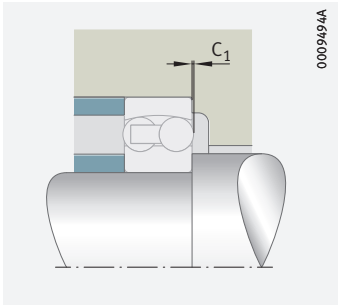

Ball projection C_1

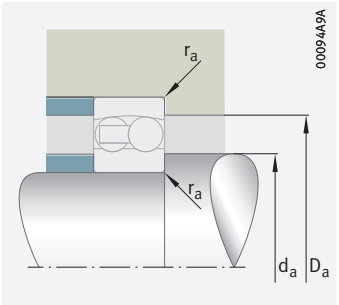

Mounting dimensions

Dimensions					Mounting dimensions			Calculation factors			
d	r	D_1	d_1	C_1 [1)]	d_a	D_a	r_a	e	Y_1	Y_2	Y_0
	min.	≈	≈	≈	min.	max.	max.				
90	2	138,7	112,7	–	101	149	2	0,17	3,74	5,79	3,92
	2	138,7	112,7	–	101	149	2	0,17	3,74	5,79	3,92
	2	139,4	111,5	–	101	149	2	0,27	2,33	3,61	2,44
	2	139,4	111,5	–	101	149	2	0,27	2,33	3,61	2,44
	3	159,8	124,4	–	104	176	2,5	0,22	2,83	4,38	2,97
	3	159,8	124,4	–	104	176	2,5	0,22	2,83	4,38	2,97
	3	159,8	115,7	–	104	176	2,5	0,39	1,63	2,53	1,71
	3	159,8	115,7	–	104	176	2,5	0,39	1,63	2,53	1,71
95	2,1	148,2	120,5	–	107	158	2,1	0,17	3,73	5,78	3,91
	2,1	148,2	120,5	–	107	158	2,1	0,17	3,73	5,78	3,91
	2,1	147,9	118,9	–	107	158	2,1	0,27	2,32	3,59	2,43
	2,1	147,9	118,9	–	107	158	2,1	0,27	2,32	3,59	2,43
	3	169,9	127,6	1,6	109	186	2,5	0,23	2,73	4,23	2,86
	3	169,9	127,6	1,6	109	186	2,5	0,23	2,73	4,23	2,86
	3	167,7	121,6	–	109	186	2,5	0,38	1,66	2,57	1,74
	3	167,7	121,6	–	109	186	2,5	0,38	1,66	2,57	1,74
100	2,1	155,2	127,3	–	112	168	2,1	0,18	3,58	5,53	3,75
	2,1	155,2	127,3	–	112	168	2,1	0,18	3,58	5,53	3,75
	2,1	156,9	124,4	–	112	168	2,1	0,27	2,33	3,61	2,44
	2,1	156,9	124,4	–	112	168	2,1	0,27	2,33	3,61	2,44
	3	181,3	135,9	2,4	114	201	2,5	0,24	2,68	4,15	2,81
	3	181,3	135,9	2,4	114	201	2,5	0,24	2,68	4,15	2,81
	3	182,7	130,8	–	114	201	2,5	0,38	1,67	2,58	1,75
	3	182,7	130,8	–	114	201	2,5	0,38	1,67	2,58	1,75
105	2,1	155,2	133,9	–	117	178	2,1	0,18	3,54	5,48	3,71
	3	190,5	143,2	2,5	119	211	2,5	0,23	2,75	4,25	2,88

Self-aligning ball bearings

With cylindrical or tapered bore

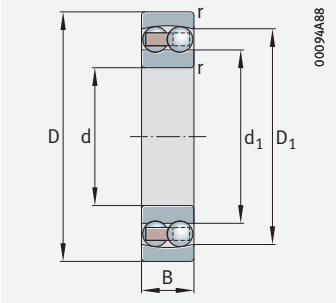

Cylindrical bore

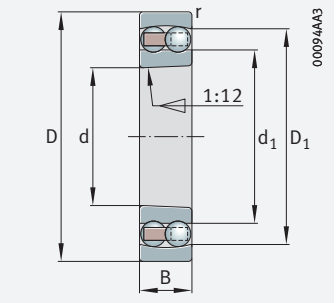

Tapered bore

d = 110 – 150 mm

Main dimensions			Basic load ratings		Fatigue limit load	Limiting speed	Speed rating	Mass	Designation
d	D	B	dyn. C_r	stat. C_{0r}	C_{ur}	n_G	$n_{\vartheta r}$	m	➤*381|1.12* ➤*381|1.13*
			N	N	N	min^{-1}	min^{-1}	≈ kg	
110	200	38	89 000	38 500	1 960	5 300	4 200	5,49	**1222-K-M-C3**
	200	38	89 000	38 500	1 960	5 300	4 200	5,57	**1222-M**
	200	53	126 000	52 000	2 650	5 000	4 700	7,27	**2222-K-M-C3**
	200	53	126 000	52 000	2 650	5 000	4 700	7,45	**2222-M**
	240	50	165 000	72 000	3 400	4 200	3 400	12,2	**1322-K-M-C3**
	240	50	165 000	72 000	3 400	4 200	3 400	12,3	**1322-M**
	240	80	221 000	95 000	4 550	3 850	3 900	17,5	**2322-K-M-C3**
	240	80	221 000	95 000	4 550	3 850	3 900	18,1	**2322-M**
120	215	42	121 000	53 000	2 600	4 750	4 200	7,13	**1224-M**
130	230	46	125 000	56 000	2 650	4 450	4 000	8,67	**1226-M**
140	250	50	163 000	74 000	3 350	3 900	3 650	11,2	**1228-M**
150	270	54	180 000	87 000	3 800	3 600	3 400	14,6	**1230-M**

medias *https://www.schaeffler.de/std/1F9A*

[1] The ball projection must be taken into consideration when designing the adjacent construction.

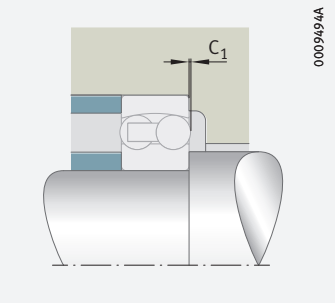

Ball projection C_1

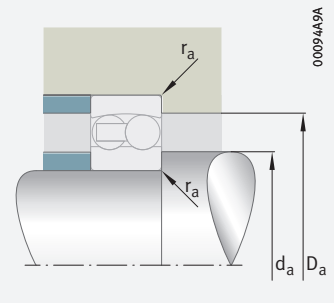

Mounting dimensions

Dimensions					Mounting dimensions			Calculation factors			
d	r	D_1	d_1	C_1 [1]	d_a	D_a	r_a	e	Y_1	Y_2	Y_0
	min.	≈	≈	≈	min.	max.	max.				
110	2,1	173,2	140,2	–	122	188	2,1	0,17	3,61	5,59	3,78
	2,1	173,2	140,2	–	122	188	2,1	0,17	3,61	5,59	3,78
	2,1	174,1	136,9	–	122	188	2,1	0,28	2,23	3,45	2,33
	2,1	174,1	136,9	–	122	188	2,1	0,28	2,23	3,45	2,33
	3	202,5	154,5	2,7	124	226	2,5	0,23	2,79	4,32	2,92
	3	202,5	154,5	2,7	124	226	2,5	0,23	2,79	4,32	2,92
	3	201,8	145,5	–	124	226	2,5	0,37	1,69	2,62	1,77
	3	201,8	145,5	–	124	226	2,5	0,37	1,69	2,62	1,77
120	2,1	187,3	149	1,8	132	203	2,1	0,2	3,11	4,81	3,25
130	3	200	161,5	0,6	144	216	2,5	0,19	3,24	5,02	3,4
140	3	220,5	175	2,7	154	236	2,5	0,21	3,05	4,71	3,19
150	3	237,9	186,7	3,8	164	256	2,5	0,22	2,9	4,49	3,04

Self-aligning ball bearings

With extended inner ring

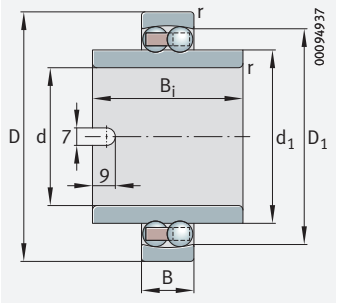

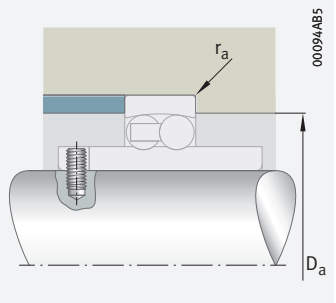

Mounting dimensions

d = 20 – 60 mm

Main dimensions			Basic load ratings		Fatigue limit load	Limiting speed	Mass	Designation
d	D	B	dyn. C_r	stat. C_{0r}	C_{ur}	n_G	m	➤*381|1.12* ➤*381|1.13*
			N	N	N	min^{-1}	≈ kg	
20	47	14	10 100	2 600	166	18 100	0,186	**11204-TVH**
25	52	15	12 300	3 300	209	15 500	0,22	**11205-TVH**
30	62	16	15 900	4 650	295	13 100	0,35	**11206-TVH**
35	72	17	16 000	5 100	325	11 600	0,54	**11207-TVH**
40	80	18	19 400	6 500	415	10 100	0,72	**11208-TVH**
45	85	19	22 000	7 300	465	9 300	0,77	**11209-TVH**
50	90	20	22 900	8 100	520	8 700	0,85	**11210-TVH**
55	100	21	27 000	10 000	630	7 700	1,17	**11211-TVH**
60	110	22	30 500	11 500	730	6 900	1,5	**11212-TVH**

medias *https://www.schaeffler.de/std/1F9A*

Dimensions					Mounting dimensions		Calculation factors			
d	r min.	B_i ≈	D_1 ≈	d_1 ≈	D_a max.	r_a max.	e	Y_1	Y_2	Y_0
20	1	40	37,8	29,2	41,4	1	0,28	2,24	3,46	2,34
25	1	44	43,6	33,3	46,4	1	0,27	2,37	3,66	2,48
30	1	48	51,6	40,1	56,4	1	0,25	2,53	3,91	2,65
35	1,1	52	59,1	47,7	65	1	0,22	2,8	4,34	2,94
40	1,1	56	67,3	54	73	1	0,22	2,9	4,49	3,04
45	1,1	58	72,1	57,7	78	1	0,21	3,04	4,7	3,18
50	1,1	58	77,1	62,7	83	1	0,2	3,17	4,9	3,32
55	1,5	60	86,4	69,5	91	1,5	0,19	3,31	5,12	3,47
60	1,5	62	95,2	78	101	1,5	0,18	3,47	5,37	3,64

Self-aligning ball bearings

With adapter sleeve

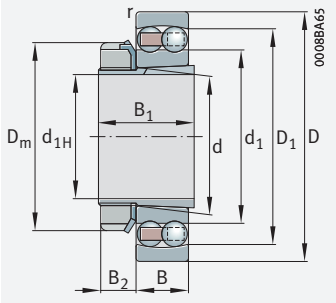

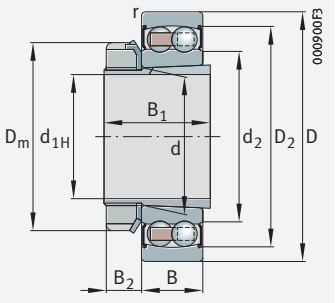

With seal 2RS

d_{1H} = 17 – 45 mm

Main dimensions				Basic load ratings		Fatigue limit load	Limiting speed	Speed rating	Mass m		Designation ➤381|1.12 ➤381|1.13	
d_{1H}	d	D	B	dyn. C_r	stat. C_{0r}	C_{ur}	n_G	$n_{\vartheta r}$	Bearing	Adapter sleeve	Bearing	Adapter sleeve
				N	N	N	min^{-1}	min^{-1}	≈ kg	≈ kg		
17	20	47	14	10 100	2 600	166	18 100	15 300	0,116	0,04	**1204-K-TVH-C3**	**H204**
20	25	52	15	12 300	3 300	209	15 500	13 400	0,135	0,07	**1205-K-TVH-C3**	**H205**
	25	52	18	12 300	3 300	209	8 100	–	0,157	0,07	**2205-K-2RS-TVH-C3**	**H305**
	25	52	18	17 300	4 450	285	14 400	13 400	0,152	0,07	**2205-K-TVH-C3**	**H305**
	25	62	17	18 300	5 000	320	12 900	10 000	0,254	0,07	**1305-K-TVH-C3**	**H305**
	25	62	24	25 000	6 600	420	12 200	11 900	0,328	0,09	**2305-K-TVH-C3**	**H2305**
25	30	62	16	15 900	4 650	295	13 100	11 400	0,217	0,1	**1206-K-TVH-C3**	**H206**
	30	62	20	15 900	4 650	295	6 800	–	0,268	0,11	**2206-K-2RS-TVH-C3**	**H306**
	30	62	20	26 000	6 900	440	11 500	11 400	0,246	0,11	**2206-K-TVH-C3**	**H306**
	30	72	19	21 700	6 300	400	11 100	8 700	0,379	0,11	**1306-K-TVH-C3**	**H306**
	30	72	27	32 500	8 800	560	10 200	10 400	0,476	0,13	**2306-K-TVH-C3**	**H2306**
30	35	72	17	16 000	5 100	325	11 600	9 800	0,319	0,136	**1207-K-TVH-C3**	**H207**
	35	72	23	16 000	5 100	325	5 600	–	0,432	0,153	**2207-K-2RS-TVH-C3**	**H307**
	35	72	23	33 000	9 000	570	9 800	10 300	0,38	0,153	**2207-K-TVH-C3**	**H307**
	35	80	21	25 500	7 900	500	9 700	7 800	0,5	0,153	**1307-K-TVH-C3**	**H307**
	35	80	31	40 500	11 200	710	8 900	9 800	0,657	0,16	**2307-K-TVH-C3**	**H2307**
35	40	80	18	19 400	6 500	415	10 100	8 600	0,408	0,177	**1208-K-TVH-C3**	**H208**
	40	80	23	19 400	6 500	415	4 950	–	0,517	0,192	**2208-K-2RS-TVH-C3**	**H308**
	40	80	23	32 500	9 500	600	8 900	8 700	0,465	0,192	**2208-K-TVH-C3**	**H308**
	40	90	23	30 000	9 700	610	8 600	7 200	0,698	0,192	**1308-K-TVH-C3**	**H308**
	40	90	33	46 000	13 500	860	7 900	8 700	0,899	0,23	**2308-K-TVH-C3**	**H2308**
40	45	85	19	22 000	7 300	465	9 300	8 200	0,454	0,23	**1209-K-TVH-C3**	**H209**
	45	85	23	22 000	7 300	465	4 650	–	0,535	0,253	**2209-K-2RS-TVH-C3**	**H309**
	45	85	23	28 500	9 000	570	8 600	7 800	0,505	0,253	**2209-K-TVH-C3**	**H309**
	45	100	25	38 500	12 700	810	7 500	6 700	0,939	0,253	**1309-K-TVH-C3**	**H309**
	45	100	36	55 000	16 600	1 060	7 000	8 000	1,19	0,298	**2309-K-TVH-C3**	**H2309**
45	50	90	20	22 900	8 100	520	8 700	7 700	0,516	0,276	**1210-K-TVH-C3**	**H210**
	50	90	23	22 900	8 100	520	4 250	–	0,593	0,306	**2210-K-2RS-TVH-C3**	**H310**
	50	90	23	28 500	9 500	600	8 100	7 100	0,543	0,306	**2210-K-TVH-C3**	**H310**
	50	110	27	42 000	14 200	900	6 900	6 300	1,19	0,306	**1310-K-TVH-C3**	**H310**

medias *https://www.schaeffler.de/std/1F9A*

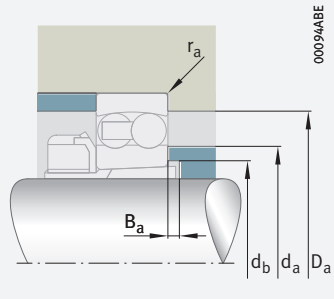

Mounting dimensions

Dimensions									Mounting dimensions					Calculation factors			
d_{1H}	r min.	D_1 ≈	D_2 ≈	d_1 ≈	d_2 ≈	D_m	B_1	B_2 ≈	d_a max.	D_a max.	d_b min.	B_a min.	r_a max.	e	Y_1	Y_2	Y_0
17	1	37,8	–	29,2	–	32	24	7	27	41,4	23	5	1	0,28	2,24	3,46	2,34
20	1	43,6	–	33,3	–	38	26	8,25	32	46,4	28	5	1	0,27	2,37	3,66	2,48
	1	–	45,3	–	30,7	38	29	8,25	32	46,4	28	5	1	0,27	2,37	3,66	2,48
	1	44,4	–	32,3	–	38	29	8,25	32	46,4	28	5	1	0,35	1,78	2,75	1,86
	1,1	50,4	–	38,1	–	38	29	8,25	35	55	28	6	1	0,28	2,29	3,54	2,4
	1,1	49,9	–	35,5	–	38	35	8,25	34	55	30	5	1	0,48	1,32	2,04	1,38
25	1	51,6	–	40,1	–	45	27	8,25	38	56,4	33	5	1	0,25	2,53	3,91	2,65
	1	–	53,3	–	37,3	45	31	8,25	38	56,4	33	5	1	0,25	2,53	3,91	2,65
	1	53,7	–	38,5	–	45	31	8,25	38	56,4	33	5	1	0,3	2,13	3,29	2,23
	1,1	58,9	–	45,1	–	45	31	8,25	42	65	33	6	1	0,26	2,39	3,71	2,51
	1,1	58,8	–	41,5	–	45	38	8,25	40	65	35	5	1	0,45	1,4	2,17	1,47
30	1,1	59,1	–	47,7	–	52	29	9,25	45	65	38	5	1	0,22	2,8	4,34	2,94
	1,1	–	63,4	–	43,5	52	35	9,25	45	65	38	5	1	0,22	2,8	4,34	2,94
	1,1	62,4	–	45,7	–	52	35	9,25	44	65	39	5	1	0,3	2,13	3,29	2,23
	1,5	70,1	–	51,3	–	52	35	9,25	49	71	39	8	1,5	0,26	2,47	3,82	2,59
	1,5	66,1	–	46,9	–	52	43	9,25	45	71	40	5	1,5	0,47	1,35	2,1	1,42
35	1,1	67,3	–	54	–	58	31	10,25	52	73	43	5	1	0,22	2,9	4,49	3,04
	1,1	–	70,3	–	49,2	58	36	10,25	52	73	43	5	1	0,22	2,9	4,49	3,04
	1,1	70,2	–	52,5	–	58	36	10,25	50	73	44	5	1	0,26	2,43	3,76	2,54
	1,5	74,7	–	57,8	–	58	36	10,25	55	81	44	5	1,5	0,25	2,52	3,9	2,64
	1,5	74,5	–	53,7	–	58	46	10,25	51	81	45	5	1,5	0,43	1,45	2,25	1,52
40	1,1	72,1	–	57,7	–	65	33	11,25	57	78	48	5	1	0,21	3,04	4,7	3,18
	1,1	–	76	–	53,8	65	39	11,25	57	78	48	5	1	0,21	3,04	4,7	3,18
	1,1	75,4	–	59	–	65	39	11,25	56	78	50	8	1	0,26	2,43	3,76	2,54
	1,5	83,5	–	64,1	–	65	39	11,25	61	91	50	5	1,5	0,25	2,5	3,87	2,62
	1,5	83,6	–	60,1	–	65	50	11,25	57	91	50	5	1,5	0,43	1,48	2,29	1,55
45	1,1	77,1	–	62,7	–	70	35	12,25	62	83	53	5	1	0,2	3,17	4,9	3,32
	1,1	–	79	–	60,5	70	42	12,25	62	83	53	5	1	0,2	3,17	4,9	3,32
	1,1	80,5	–	64	–	70	42	12,25	61	83	55	10	1	0,24	2,61	4,05	2,74
	2	91,7	–	71,2	–	70	42	12,25	68	99	55	5	2	0,24	2,6	4,03	2,73

Self-aligning ball bearings

With adapter sleeve

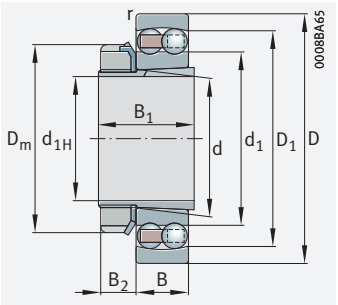

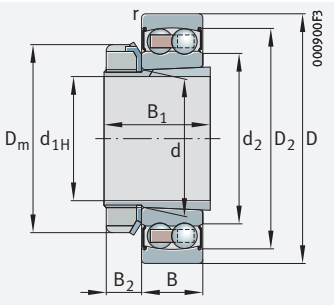

With seal 2RS

d_{1H} = 50 – 75 mm

Main dimensions				Basic load ratings		Fatigue limit load	Limiting speed	Speed rating	Mass m		Designation ➤381|1.12 ➤381|1.13	
d_{1H}	d	D	B	dyn. C_r	stat. C_{0r}	C_{ur}	n_G	$n_{\vartheta r}$	Bearing	Adapter sleeve	Bearing	Adapter sleeve
				N	N	N	min^{-1}	min^{-1}	≈ kg	≈ kg		
50	55	100	21	27 000	10 000	630	7 700	6 900	0,682	0,319	**1211-K-TVH-C3**	**H211**
	55	100	25	27 000	10 000	630	3 850	–	0,808	0,358	**2211-K-2RS-TVH-C3**	**H311**
	55	100	25	39 000	12 500	790	7 000	6 700	0,73	0,358	**2211-K-TVH-C3**	**H311**
	55	120	29	52 000	17 900	1 130	6 100	5 800	1,55	0,358	**1311-K-TVH-C3**	**H311**
	55	120	43	77 000	24 000	1 520	5 700	7 100	2,02	0,435	**2311-K-TVH-C3**	**H2311**
55	60	110	22	30 500	11 500	730	6 900	6 300	0,88	0,35	**1212-K-TVH-C3**	**H212**
	60	110	28	30 500	11 500	730	3 450	–	1,13	0,401	**2212-K-2RS-TVH-C3**	**H312**
	60	110	28	48 000	16 500	1 040	6 300	6 400	1,03	0,401	**2212-K-TVH-C3**	**H312**
	60	130	31	58 000	20 800	1 320	5 500	5 200	1,94	0,401	**1312-K-TVH-C3**	**H312**
	60	130	46	89 000	28 000	1 790	5 200	6 700	2,52	0,493	**2312-K-TVH-C3**	**H2312**
60	65	120	23	31 000	12 500	790	6 500	5 800	1,13	0,4	**1213-K-TVH-C3**	**H213**
	65	120	31	31 000	12 500	790	3 150	–	1,5	0,471	**2213-K-2RS-TVH-C3**	**H313**
	65	120	31	58 000	19 200	1 220	5 600	6 200	1,33	0,471	**2213-K-TVH-C3**	**H313**
	65	140	33	63 000	22 900	1 420	5 200	5 100	2,41	0,471	**1313-K-TVH-C3**	**H313**
	65	140	48	98 000	32 500	2 040	4 750	6 100	3,16	0,57	**2313-K-TVH-C3**	**H2313**
	70	125	24	35 000	13 800	880	6 200	5 900	1,23	0,63	**1214-K-TVH-C3**	**H214**
65	75	130	25	39 000	15 700	980	5 700	5 500	1,32	0,71	**1215-K-TVH-C3**	**H215**
	75	130	31	44 500	17 800	1 110	5 600	5 600	1,6	0,86	**2215-K-TVH-C3**	**H315**
	75	160	37	80 000	30 000	1 740	6 700	4 750	3,52	1,06	**1315-K-M-C3**	**H315**
	75	160	55	125 000	42 500	2 490	6 100	5 600	5,21	0,89	**2315-K-M-C3**	**H2315**
70	80	140	26	40 000	17 000	1 020	5 300	5 100	1,62	0,89	**1216-K-TVH-C3**	**H216**
	80	140	33	49 500	19 900	1 210	5 300	5 400	1,97	1,06	**2216-K-TVH-C3**	**H316**
	80	170	39	89 000	33 000	1 870	6 200	4 500	4,5	1,06	**1316-K-M-C3**	**H316**
	80	170	58	139 000	48 500	2 750	5 700	5 400	6,05	1,31	**2316-K-M-C3**	**H2316**
75	85	150	28	49 500	20 800	1 210	4 900	4 950	2,03	1,03	**1217-K-TVH-C3**	**H217**
	85	150	36	59 000	23 600	1 380	7 200	5 200	2,73	1,21	**2217-K-M-C3**	**H317**
	85	180	41	99 000	38 000	2 070	5 800	4 300	5,32	1,21	**1317-K-M-C3**	**H317**
	85	180	60	143 000	51 000	2 850	5 400	5 200	7,04	1,47	**2317-K-M-C3**	**H2317**

medias *https://www.schaeffler.de/std/1F9A*

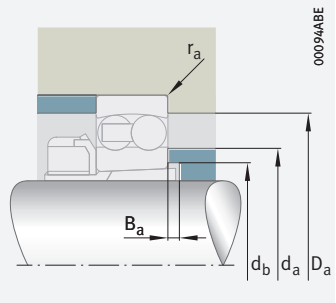

Mounting dimensions

Dimensions									Mounting dimensions					Calculation factors			
d_{1H}	r min.	D_1 ≈	D_2 ≈	d_1 ≈	d_2 ≈	D_m	B_1	B_2 ≈	d_a max.	D_a max.	d_b min.	B_a min.	r_a max.	e	Y_1	Y_2	Y_0
50	1,5	86,4	–	69,5	–	75	37	12,5	69	91	60	6	1,5	0,19	3,31	5,12	3,47
	1,5	–	88,2	–	68	75	45	12,5	69	91	60	6	1,5	0,19	3,31	5,12	3,47
	1,5	89,8	–	69,6	–	75	45	12,5	68	91	60	10	1,5	0,22	2,92	4,52	3,06
	2	101	–	78	–	75	45	12,5	74	109	60	6	2	0,24	2,66	4,12	2,79
	2	100,2	–	71,7	–	75	59	12,5	69	109	61	6	2	0,42	1,51	2,33	1,58
55	1,5	95,2	–	78	–	80	38	12,5	75	101	64	5	1,5	0,18	3,47	5,37	3,64
	1,5	–	99,5	–	70,4	80	47	12,5	75	101	64	5	1,5	0,18	3,47	5,37	3,64
	1,5	98,2	–	76,6	–	80	47	12,5	73	101	65	8	1,5	0,23	2,69	4,16	2,82
	2,1	112,2	–	87	–	80	47	12,5	83	118	65	5	2,1	0,23	2,77	4,28	2,9
	2,1	108,5	–	77	–	80	62	12,5	74	118	66	5	2,1	0,41	1,55	2,4	1,62
60	1,5	102,7	–	85,2	–	85	40	13,5	83	111	70	5	1,5	0,18	3,57	5,52	3,74
	1,5	–	107,8	–	78	85	50	13,5	83	111	70	5	1,5	0,18	3,57	5,52	3,74
	1,5	106,9	–	82,4	–	85	50	13,5	79	111	70	8	1,5	0,23	2,78	4,31	2,92
	2,1	118,2	–	92,7	–	85	50	13,5	89	128	70	5	2,1	0,23	2,75	4,26	2,88
	2,1	118,3	–	85,6	–	85	65	13,5	82	128	72	5	2,1	0,39	1,62	2,51	1,7
	1,5	106,1	–	87,2	–	92	41	13,5	86	116	75	5	1,5	0,19	3,36	5,21	3,52
65	1,5	113,6	–	93,7	–	98	43	14,5	92	121	80	5	1,5	0,19	3,32	5,15	3,48
	1,5	114,3	–	93,3	–	98	55	14,5	90	121	80	12	1,5	0,26	2,47	3,82	2,59
	2,1	134,8	–	104,8	–	98	55	14,5	100	148	80	5	2,1	0,23	2,77	4,29	2,9
	2,1	135,2	–	100,5	–	98	73	14,5	94	148	82	5	2,1	0,38	1,64	2,54	1,72
70	2	122,1	–	101,8	–	105	46	16,75	99	129	85	5	2	0,16	3,9	6,03	4,08
	2	121	–	99,2	–	105	59	16,75	96	129	85	12	2	0,25	2,48	3,84	2,6
	2,1	144,3	–	110,6	–	105	59	16,75	107	158	85	5	2,1	0,22	2,87	4,44	3
	2,1	144,1	–	107,6	–	105	78	16,75	100	158	88	5	2,1	0,37	1,7	2,62	1,78
75	2	130,4	–	107,5	–	110	50	17,75	105	139	90	6	2	0,17	3,73	5,78	3,91
	2	130	–	105,2	–	110	63	17,75	102	139	91	12	2	0,26	2,46	3,81	2,58
	3	151,9	–	117,2	–	110	63	17,75	114	166	91	6	2,5	0,22	2,88	4,46	3,02
	3	152,2	–	114,4	–	110	82	17,75	106	166	94	6	2,5	0,37	1,68	2,61	1,76

Self-aligning ball bearings

With adapter sleeve

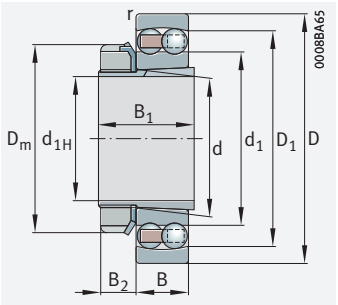

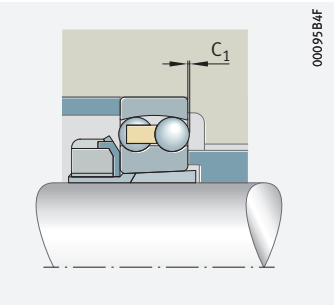

Ball projection C_1 [1)]

d_{1H} = 80 – 100 mm

Main dimensions				Basic load ratings		Fatigue limit load	Limiting speed	Speed rating	Mass m		Designation ➤381|1.12 ➤381|1.13	
d_{1H}	d	D	B	dyn. C_r	stat. C_{0r}	C_{ur}	n_G	$n_{\vartheta r}$	Bearing	Adapter sleeve	Bearing	Adapter sleeve
				N	N	N	min^{-1}	min^{-1}	≈ kg	≈ kg		
80	90	160	30	57 000	23 500	1 330	4 550	4 850	2,48	1,21	**1218-K-TVH-C3**	**H218**
	90	160	40	71 000	28 500	1 630	4 400	5 200	3,18	1,41	**2218-K-TVH-C3**	**H318**
	90	190	43	109 000	43 000	2 300	5 500	4 200	6,27	1,41	**1318-K-M-C3**	**H318**
	90	190	64	156 000	58 000	3 100	5 100	5 000	8,38	1,71	**2318-K-M-C3**	**H2318**
85	95	170	32	64 000	27 000	1 490	6 300	4 600	3,28	1,39	**1219-K-M-C3**	**H219**
	95	170	43	84 000	34 500	1 890	6 100	5 000	4,24	1,58	**2219-K-M-C3**	**H319**
	95	200	45	134 000	51 000	2 650	5 100	4 050	7,2	1,58	**1319-K-M-C3**	**H319**
	95	200	67	167 000	64 000	3 350	4 800	4 750	9,97	1,95	**2319-K-M-C3**	**H2319**
90	100	180	34	70 000	29 500	1 590	6 000	4 500	3,94	1,52	**1220-K-M-C3**	**H220**
	100	180	46	98 000	40 500	2 180	5 700	4 900	5,1	1,76	**2220-K-M-C3**	**H320**
	100	215	47	145 000	57 000	2 900	4 700	3 850	8,95	1,76	**1320-K-M-C3**	**H320**
	100	215	73	196 000	79 000	4 000	4 300	4 350	12,7	2,2	**2320-K-M-C3**	**H2320**
100	110	200	38	89 000	38 500	1 960	5 300	4 200	5,49	1,95	**1222-K-M-C3**	**H222**
	110	200	53	126 000	52 000	2 650	5 000	4 700	7,27	2,25	**2222-K-M-C3**	**H322**
	110	240	50	165 000	72 000	3 400	4 200	3 400	12,2	2,25	**1322-K-M-C3**	**H322**
	110	240	80	221 000	95 000	4 550	3 850	3 900	17,5	2,78	**2322-K-M-C3**	**H2322**

medias *https://www.schaeffler.de/std/1F9A*

1) The ball projection must be taken into consideration when designing the adjacent construction.

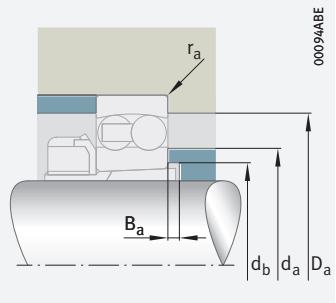

Mounting dimensions

Dimensions								Mounting dimensions					Calculation factors			
d_{1H}	r min.	D_1 ≈	d_1 ≈	D_m	B_1	B_2 ≈	C_1 [1]	d_a max.	D_a max.	d_b min.	B_a min.	r_a max.	e	Y_1	Y_2	Y_0
80	2	138,7	112,7	120	52	17,75	–	110	149	95	6	2	0,17	3,74	5,79	3,92
	2	139,4	111,5	120	65	17,75	–	108	149	96	10	2	0,27	2,33	3,61	2,44
	3	159,8	124,4	120	65	17,75	–	120	176	96	6	2,5	0,22	2,83	4,38	2,97
	3	159,8	115,7	120	86	17,75	–	112	176	100	6	2,5	0,39	1,63	2,53	1,71
85	2,1	148,2	120,5	125	55	18,75	–	117	158	100	7	2,1	0,17	3,73	5,78	3,91
	2,1	147,9	118,9	125	68	18,75	–	114	158	102	9	2,1	0,27	2,32	3,59	2,43
	3	169,9	127,6	125	68	18,75	1,6	126	186	102	7	2,5	0,23	2,73	4,23	2,86
	3	167,7	121,6	125	90	18,75	–	117	186	105	7	2,5	0,38	1,66	2,57	1,74
90	2,1	155,2	127,3	130	58	19,75	–	124	168	106	7	2,1	0,18	3,58	5,53	3,75
	2,1	156,9	124,4	130	71	19,75	–	120	168	108	8	2,1	0,27	2,33	3,61	2,44
	3	181,3	135,9	130	71	19,75	2,4	132	201	108	7	2,5	0,24	2,68	4,15	2,81
	3	182,7	130,8	130	97	19,75	–	125	201	110	7	2,5	0,38	1,67	2,58	1,75
100	2,1	173,2	140,2	145	63	20,75	–	138	188	116	7	2,1	0,17	3,61	5,59	3,78
	2,1	174,1	136,9	145	77	20,75	–	132	188	118	6	2,1	0,28	2,23	3,45	2,33
	3	202,5	154,5	145	77	20,75	2,7	150	226	118	9	2,5	0,23	2,79	4,32	2,92
	3	201,8	145,5	145	105	20,75	–	139	226	121	7	2,5	0,37	1,69	2,62	1,77