# Axial deep groove ball bearings



Matrix for bearing preselection 1051

**1 Axial deep groove ball bearings 1052**

1.1 Bearing design 1052
1.2 Load carrying capacity 1054
1.3 Compensation of angular misalignments 1054
1.4 Lubrication 1054
1.5 Sealing 1055
1.6 Speeds 1055

*1.7* Noise *1055*
*1.8* Temperature range *1056*
*1.9* Cages *1056*
*1.10* Internal clearance *1057*
*1.11* Dimensions, tolerances *1057*
*1.12* Suffixes *1058*
*1.13* Structure of bearing designation *1058*
*1.14* Dimensioning *1058*
*1.15* Minimum load *1059*
*1.16* Design of bearing arrangements *1059*
*1.17* Mounting and dismounting *1060*
*1.18* Legal notice regarding data freshness *1061*
*1.19* Further information *1061*
Product tables *1062*
*Axial deep groove ball bearings, single direction* *1062*
*Axial deep groove ball bearings, double direction* *1074*

# Matrix for bearing preselection

*The matrix gives an overview of the types and design features.*

*It can be used to make a preliminary assessment of whether a bearing is fundamentally suitable for the envisaged application.*

*The additional information provided in the product chapter (see column "detailed information") and in the Technical principles must, however, be observed in addition to this overview in selection of the bearing.*

| Design features and suitability | | | Axial deep groove ball bearings | | |
|---|---|---|---|---|---|
| +++ extremely suitable<br>++ highly suitable<br>+ suitable<br>(+) suitable with restrictions<br>– not suitable/not applicable<br>✓ available | | | single direction | double direction | detailed information ➤ 1052 |
| Load carrying capacity | radial |  | – | – | ➤ 1054\|1.2 |
| | axial, one direction |  | ++ | ++ | ➤ 1054\|1.2 |
| | axial, both directions |  | – | ++ | ➤ 1054\|1.2 |
| | moments |  | – | – | ➤ 1054\|1.2 |
| Compensation of angular misalignments | static |  | (+)[1] | (+)[1] | ➤ 1054\|1.3 |
| | dynamic |  | – | – | ➤ 1054\|1.3 |
| Bearing design | cylindrical bore |  | ✓ | ✓ | ➤ 1052\|1.1 |
| | tapered bore |  | – | – | ➤ 1052\|1.1 |
| | separable |  | ✓ | ✓ | ➤ 1060\|1.17 |
| Lubrication | greased | 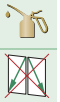 | – | – | ➤ 1054\|1.4 |
| Sealing | open |  | ✓ | ✓ | ➤ 1055\|1.5 |
| | non-contact |  | – | – | – |
| | contact |  | – | – | – |
| Operating temperature in °C | from<br>to |  | –30<br>+150[1] | –30<br>+150[1] | ➤ 1056\|1.8 |
| Suitability for | high speeds |  | + | + | ➤ 1055\|1.6 |
| | high running accuracy |  | + | + | ➤ 1057\|1.11<br>➤ 115 |
| | low-noise running |  | (+) | (+) | ➤ 1055\|1.7<br>➤ 27 |
| | high rigidity |  | ++ | ++ | ➤ 54 |
| | reduced friction |  | + | + | ➤ 56 |
| | length compensation within bearing |  | – | – | – |
| | non-locating bearing arrangement |  | – | – | ➤ 141 |
| | locating bearing arrangement |  | +++ | +++ | ➤ 141 |
| X-life bearings | | X-life | – | – | – |
| Bearing bore d in mm | from<br>to |  | 10<br>260[2] | 10<br>190 | ➤ 1062<br>➤ 1074 |
| Product tables | from page ➤ |  | 1062 | 1074 | |

[1] Valid for bearings with spherical housing locating washer

[2] Larger catalogue bearings GL 1

# 1 Axial deep groove ball bearings

Axial deep groove ball bearings:

- are standardised, ready-to-fit units with high axial load carrying capacity ➤*1053*|*2* and ➤*1053*|*3*
- are suitable exclusively for the support of predominantly axial loads ➤*1054*|*1.2*
- are particularly suitable where the bearing position is subjected to high axial loads from one or both sides, but the requirements for axial load carrying capacity of the bearings are not so high that axial cylindrical roller bearings with even higher load carrying capacity must be used
- permit higher speeds than roller or needle roller and cage assemblies ➤*1052*|*1*
- compensate, in conjunction with a spherical housing locating washer, static misalignments between the shaft and housing ➤*1054*|*1.3*

For an overview of other product-specific features, see the Matrix for bearing preselection ➤*1051*.

**1**
*Axial deep groove ball bearing: comparison of speed and load carrying capacity with axial cylindrical roller bearing and axial needle roller and cage assembly*

$n_G$ = *limiting speed*
$F_a$ = *axial load*
$C_a$ = *basic axial dynamic load rating*

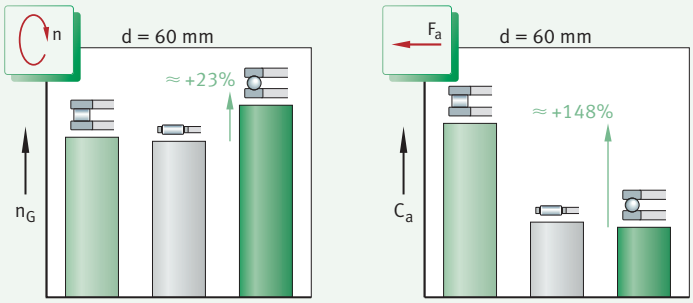


## 1.1 Bearing design

*Design variants*

Axial deep groove ball bearings are available as:

- single direction bearings ➤*1053*|*2*
- double direction bearings ➤*1053*|*3*

### Basic bearing design

*Non-self-retaining, easy-to-fit bearing units*

Axial deep groove ball bearings are part of the group of axial ball bearings. The bearings are of a multi-piece construction and, due to their design, are not self-retaining. As a result, it is possible to mount the bearing parts (shaft locating washer, housing locating washer, ball and cage assembly, support washer) separately from each other. In order to guide the balls, the shaft and housing locating washer have raceway grooves (formed rolling element raceways) with a defined osculation, in which the rolling elements circulate. The ball set is retained by a sheet steel cage or a solid brass cage ➤*1056*|*2*. When using these bearings, the designer does not need to produce the bearing parts for his bearing arrangement and match these to each other himself, but can instead use a standarised, ready-to-fit unit.

## Single direction axial deep groove ball bearings

*Ready-to-fit bearing unit for compact axial designs*

These axial deep groove ball bearings comprise a shaft locating washer, a housing locating washer and a ball and cage assembly ➤*1053*|*2*. In order to ensure centring of the washers with a precise fit, the bore of the shaft locating washer (d) is ground. In contrast, the bore of the housing locating washer ($D_1$) is more generously dimensioned and is turned. The housing locating washer can be flat or spherical and can be configured with or without a support washer. The support washers U2 and U3 must be ordered in addition to the bearing. Load carrying capacity of single direction bearings ➤*1054*|*1.2*.

*2*
*Axial deep groove ball bearings, single direction*

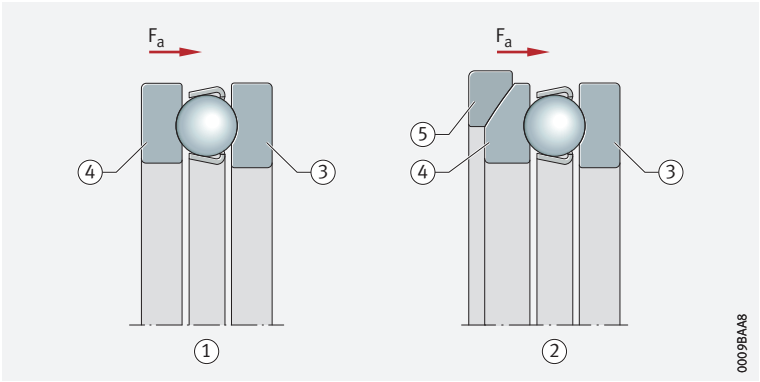


$F_a$ = *axial load*

① *Axial deep groove ball bearing with flat housing locating washer*
② *Axial deep groove ball bearing with spherical housing locating washer and support washer*
③ *Shaft locating washer*
④ *Housing locating washer (flat or spherical)*
⑤ *Support washer*

## Double direction axial deep groove ball bearings

*Ready-to-fit bearing unit, suitable for combination with support washers*

Double direction bearings comprise a shaft locating washer, two housing locating washers and two ball and cage assemblies ➤*1053*|*3*. They can also be combined with support washers U2 and U3. The housing locating washers and ball sets correspond to the designs of the single direction bearings. Load carrying capacity of double direction bearings ➤*1054*|*1.2*.

*3*
*Axial deep groove ball bearings, double direction*

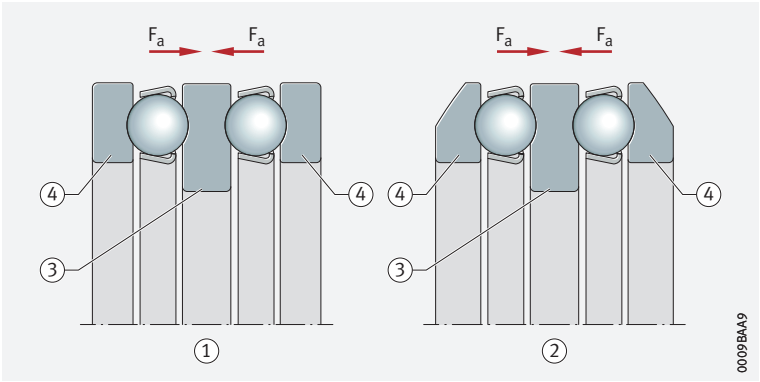


$F_a$ = *axial load*

① *Axial deep groove ball bearing with flat housing locating washers*
② *Axial deep groove ball bearing with spherical housing locating washers, without support washer*
③ *Shaft locating washer*
④ *Housing locating washer (flat or spherical)*

## 1.2 Load carrying capacity

Axial deep groove ball bearings are suitable for the support of predominantly axial loads. They must not be subjected to predominantly radial loads.

✎ *Single direction bearings*

Single direction axial deep groove ball bearings can support axial forces in one direction and support the shaft on one side ➤*1053*|*2*.

✎ *Double direction bearings*

Double direction axial deep groove ball bearings support axial forces in both directions and can guide the shaft on both sides ➤*1053*|*3*.

## 1.3 Compensation of angular misalignments

Axial deep groove ball bearings react with high sensitivity to angular misalignments. In cases where the contact face for the housing locating washer is not vertical (perpendicular) to the bearing axis, the angular misalignment can be compensated by means of bearings with a spherical housing locating washer and support washer ➤*1053*|*2*.

### Single direction bearings

✎ *Series 511, 512, 513, 514 do not permit angular adjustment*

Bearings of series 511, 512, 513 and 514 have a flat housing locating washer. As a result, they do not permit angular misalignment or skewing between the shaft and housing.

✎ *Series 532, 533 permit angular adjustment*

Bearings of series 532 and 533 have a spherical housing locating washer. With an appropriate housing design and in conjunction with support washers U2 and U3, they are variable in angle as a result and can therefore tolerate static misalignments of the shaft relative to the housing within certain limits.

### Double direction bearings

✎ *Series 522, 523 do not permit angular adjustment*

Bearings of series 522 and 523 have two flat housing locating washers and do not permit angular adjustment.

✎ *Series 542, 543 permit angular adjustment*

Bearings of series 542 and 543 have spherical housing locating washers. With an appropriate housing design and in conjunction with support washers U2 and U3, they are variable in angle as a result and can therefore tolerate static misalignments of the shaft relative to the housing within certain limits.

## 1.4 Lubrication

✎ *Oil or grease lubrication is possible*

The bearings are not greased. In order to prevent direct metallic contact between rolling elements, raceways and cages, they must be lubricated. Oil or grease lubrication is suitable. The lubricant reduces the wear and also protects the surfaces against corrosion. The choice of lubricant is essentially dependent on the operating temperatures and the speeds; it is also influenced, however, by the load, mounting position, osculations etc.

If there is any uncertainty regarding the suitability of the selected lubricant for the application, please consult Schaeffler or the lubricant manufacturer.

## 1.5 Sealing

*The bearings are of an open design*

Axial deep groove ball bearings are supplied without seals. As a result, sealing of the bearing position must be carried out in the adjacent construction. This must reliably prevent:

- moisture and contaminants from entering the bearing
- the egress of lubricant from the bearing

## 1.6 Speeds

*Speeds in the product tables*

The product tables generally give two speeds for the bearings:

- the kinematic limiting speed $n_G$
- the thermal speed rating $n_{\vartheta r}$

### Limiting speeds

The limiting speed $n_G$ is the kinematically permissible speed of the bearing. Even under favourable mounting and operating conditions, this value should not be exceeded without prior consultation with Schaeffler ➤64.

The values in the product tables are valid for oil lubrication.

*Values for grease lubrication*

For grease lubrication, 75% of the value stated in the product tables is permissible in each case.

### Reference speeds

*$n_{\vartheta r}$ is used to calculate $n_\vartheta$*

The thermal speed rating $n_{\vartheta r}$ is not an application-oriented speed limit, but is a calculated ancillary value for determining the thermally safe operating speed $n_\vartheta$ ➤64.

## 1.7 Noise

### Schaeffler Noise Index

The Schaeffler Noise Index (SGI) is not yet available for this bearing type ➤69. The data for these bearing series will be introduced and updated in stages.

Further information:

- ***medias*** *https://medias.schaeffler.com*

# 1.8 Temperature range

✎ *Limiting values*

The operating temperature of the bearings is limited by:

- the dimensional stability of the bearing washers and rolling elements
- the support washers
- the cage
- the lubricant

✎ *–30 °C to +150 °C*

Possible operating temperatures for axial deep groove ball bearings ➤*1056*|▦ *1*. The support washers are made from rolling bearing steel and are suitable for the same temperatures as the bearing washers and rolling elements. The temperature limit values of the lubricant must be observed.

▦ **1**
*Permissible temperature ranges*

| Operating temperature | Axial deep groove ball bearings with sheet steel or brass cages |
|---|---|
| | –30 °C to +150 °C |

In the event of anticipated temperatures which lie outside the stated values, please contact Schaeffler.

# 1.9 Cages

✎ *Sheet steel cages or solid brass cages are used as standard*

Standard cages for axial deep groove ball bearings ➤*1056*|▦ *2*. Other cage designs are available by agreement. With such cages, however, suitability for high speeds and temperatures as well as the basic load ratings may differ from the values for the bearings with standard cages. Bearings with sheet steel cages do not have a cage suffix ➤*1056*|▦ *2*.

If there is any uncertainty regarding cage suitability for a specific application, please consult Schaeffler.

▦ **2**
*Cage, cage suffix, bore code*

| Bearing series | Sheet steel cage<br>– | Solid brass cage<br>MP |
|---|---|---|
| | Bore code | |
| 511 | up to 28 | from 30 |
| 512 | up to 28 | from 30 |
| 513 | up to 20 | from 22 |
| 514 | up to 11 | from 12 |
| 522 | up to 28 | from 30 |
| 523 | up to 20 | from 22 |
| 524 | 06 to 11 | – |
| 532 | up to 28 | from 30 |
| 533 | up to 20 | from 22 |
| 534 | 06 to 11 | – |
| 542 | up to 28 | from 30 |
| 543 | up to 20 | 22, 24 |
| 544 | 06 to 11 | – |

# 1.10 Internal clearance

*Axial clearance and preload is determined by the application*

In the case of axial deep groove ball bearings, the internal clearance (axial clearance) is only achieved when the bearings are mounted. The requisite axial clearance of the bearing arrangement is dependent on the application and must take account of the conditions in the bearing arrangement while warm from operation and subjected to load. If axial deep groove ball bearings are subjected to vibrations while under predominantly static load for example, they must be lightly preloaded. Preload can be applied, for example, using housing nuts ➤1057|4. Other suitable means include shaft nuts, disc springs, calibrated sheets (shims) etc. It must always be ensured that no slippage occurs in operation between the rolling elements and raceways ➤1059|1.15. It must also be ensured that the preload does not exceed the optimum value, otherwise there will be an increase in friction and therefore in heat generation in the bearing. These will both have a negative effect on the operating life of the bearings.

If there is any uncertainty regarding the setting of the axial clearance, Schaeffler must always be consulted.

**4**
*Setting the axial clearance of a double direction axial deep groove ball bearing by means of a housing nut*

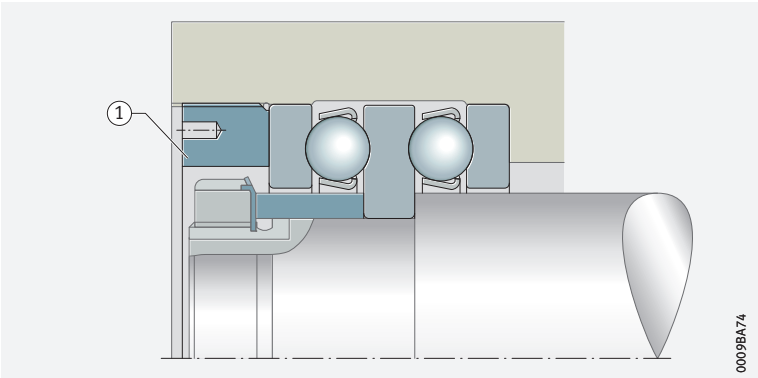


① *Housing nut*

# 1.11 Dimensions, tolerances

## Dimension standards

Bearings with a flat locating surface on the housing locating washer correspond to ISO 104:2015 or DIN 616:2000 and DIN 711:2010 as well as DIN 715:2011.

Bearings with a spherical locating surface on the housing locating washer correspond to ISO 20516:2007 and DIN 711:2010 as well as DIN 715:2011.

## Chamfer dimensions

The limiting dimensions for chamfer dimensions correspond to DIN 620-6:2004. Overview and limiting values ➤140. Nominal value of chamfer dimension ➤1062|.

## Tolerances

The tolerances for the dimensional and running accuracy of axial deep groove ball bearings correspond to tolerance class Normal in accordance with ISO 199:2014. Tolerance values in accordance with ISO 199 ➤135|25 to ➤137|28.

# 1.12 Suffixes

Suffixes describe the design and features of a bearing in more detail.

**3** *Suffixes and corresponding descriptions*

| Suffix | Description of suffix | |
|---|---|---|
| MP | Solid brass cage, ball-guided | Standard |
| P5 | Bearing in tolerance class 5 | Special design, available by agreement |
| P6 | Bearing in tolerance class 6 | |

# 1.13 Structure of bearing designation

With ***medias*** interchange, equivalent Schaeffler bearing designations can be determined for bearing designations from other rolling bearing manufacturers *https://www.schaeffler.de/std/1B69*.

*Examples of composition of bearing designation*

The designation of bearings follows a set model.
Examples ➤*1058*|*5* and ➤*1058*|*6*.
The composition of designations is subject to DIN 623-1 ➤*102*|*10*.

**5** *Axial deep groove ball bearing, single direction, with spherical housing locating washer and support washer: designation structure*

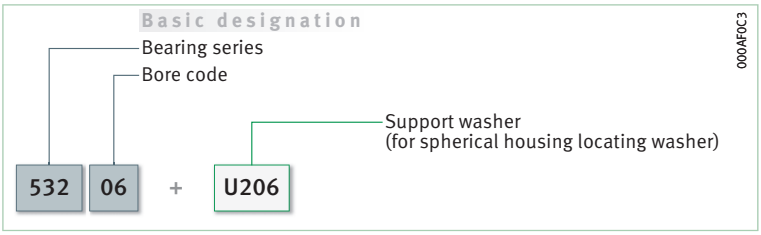


**6** *Axial deep groove ball bearing, double direction, with spherical housing locating washers: designation structure*




# 1.14 Dimensioning

## Equivalent dynamic bearing load

*$P = F_a$*

Axial deep groove ball bearings can only support axial forces ➤*1054*|*1.2*.
As a result, $P = F_a$ ➤*1058*|*f 1*.

**f 1** *Equivalent dynamic load*

$$P = F_a$$

*Legend*

| | | |
|---|---|---|
| $P$ | N | Equivalent dynamic bearing load |
| $F_a$ | N | Axial load. |

## Equivalent static bearing load

*$P_0 = F_{0a}$*

Since the bearings can only support axial loads, $P_0 = F_{0a}$ ➤*1058*|*f 2*.

**f 2** *Equivalent static load*

$$P_0 = F_{0a}$$

*Legend*

| | | |
|---|---|---|
| $P_0$ | N | Equivalent static bearing load |
| $F_{0a}$ | N | Largest axial load present (maximum load). |

### Static load safety factor

✎ $S_0 = C_0/P_0$

In addition to the basic rating life L ($L_{10h}$), it is also always necessary to check the static load safety factor $S_0$ ➤ *1059* | *f 3*.

*f 3*
*Static load safety factor*

$$S_0 = \frac{C_0}{P_0}$$

*Legend*

| | | |
|---|---|---|
| $S_0$ | – | Static load safety factor |
| $C_0$ | N | Basic static load rating |
| $P_0$ | N | Equivalent static bearing load. |

## 1.15 Minimum load

✎ *In order to prevent damage due to slippage, a minimum axial load of $F_{a\,min}$ is required*

Under axial load, the balls are guided under favourable rolling conditions at the base of the groove. This deteriorates, however, if the centrifugal force occurring at higher speeds and very low loads presses the balls outwards. In this case, detrimental sliding motions can occur between the rolling elements and the raceways due to centrifugal forces and gyroscopic moments. In order to prevent these sliding motions, the bearings must be subjected to the minimum axial load $F_{a\,min}$ ➤ *1059* | *f 4*.
This can also be achieved by means of preloading, for example using springs. The minimum load factor A is given in the product tables.
For $n_{max}$, the maximum operating speed must be used.

*f 4*
*Minimum axial load*

$$F_{a\,min} = 1000 \cdot A \cdot \left(\frac{n_{max}}{1000}\right)^2$$

*Legend*

| | | |
|---|---|---|
| $F_{a\,min}$ | N | Minimum axial load |
| A | – | Minimum load factor ➤ *1062* \| ▦ |
| $n_{max}$ | $min^{-1}$ | Maximum operating speed. |

## 1.16 Design of bearing arrangements

✎ *In the case of misalignments: use spherical support washers or produce the locating surface in the housing to a spherical design*

Bearings with spherical housing locating washers can compensate, in conjunction with a spherical bearing seating surface, misalignments between the locating surface in the housing and on the shaft ➤ *1054* | *1.3*. These bearings can be mounted together with support washers also of a spherical design or directly in the housing. In this case, however, the locating surface in the housing must also be of a spherical design.

✎ *Shaft tolerances*

Single direction bearings should have the shaft tolerance j6 Ⓔ, while k6 Ⓔ should be selected for double direction bearings.

✎ *Tolerances for the housing bore*

The tolerance of the locating bore is dependent on the running accuracy to be achieved. For normal running accuracy, it should be in the tolerance class E8 Ⓔ, for high running accuracy, it should be in the tolerance class H6 Ⓔ.

### Mounting dimensions for the contact surfaces of bearing rings

✎ *The contact surfaces for the washers must be of sufficient height*

The shoulders on the adjacent construction (shaft and housing) must be sufficiently high that the shaft and housing locating washers are supported over at least half their height. The abutment shoulders should be rigid, flat and perpendicular to the axis of rotation. Proven mounting dimensions for the radii and diameters of abutment shoulders are given in the product tables ➤ *1062* | ▦. These dimensions are limiting dimensions (maximum or minimum dimensions); the actual values should not be higher or lower than specified.

# 1.17 Mounting and dismounting

*Do not transpose the shaft and housing locating washer*

In the case of single direction bearings, it must be ensured that the shaft and housing locating washer are not exchanged with each other but are mounted in the correct position.

On the shaft locating washer, the bore d is ground and the outside diameter $d_1$ is not ground ➤*1060*| *7*. For reliable operation, the shaft locating washer should always abut a shoulder of corresponding dimensions or a support ring securely located on the shaft.

*As the bearings are not self-retaining, they are easy to mount*

Axial deep groove ball bearings are not self-retaining. As a result, the bearing washers and the ball and cage assembly can be mounted separately from each other ➤*1052*| *1.1*. This gives simplified mounting of the bearings.

*7*
*Axial deep groove ball bearing, single direction*

① *Shaft locating washer, bore d ground, outside diameter $d_1$ not ground*

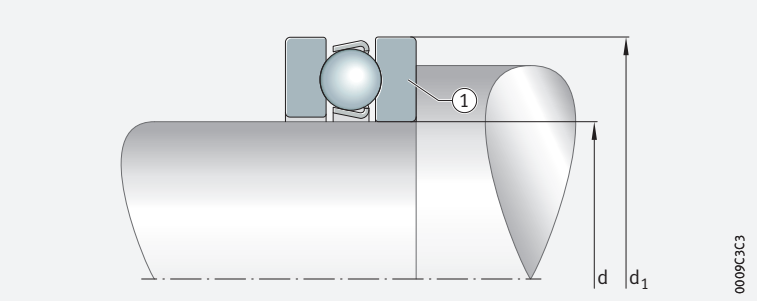


## Schaeffler Mounting Handbook

*Rolling bearings must be handled with great care*

Rolling bearings are well-proven precision machine elements for the design of economical and reliable bearing arrangements, which offer high operational security. In order that these products can function correctly and achieve the envisaged operating life without detrimental effect, they must be handled with care.

The Schaeffler Mounting Handbook MH 1 gives comprehensive information about the correct storage, mounting, dismounting and maintenance of rotary rolling bearings *https://www.schaeffler.de/std/1D53*. It also provides information which should be observed by the designer, in relation to the mounting, dismounting and maintenance of bearings, in the original design of the bearing position. This book is available from Schaeffler on request.

## 1.18 Legal notice regarding data freshness

*✎ The further development of products may also result in technical changes to catalogue products*

Of central interest to Schaeffler is the further development and optimisation of its products and the satisfaction of its customers. In order that you, as the customer, can keep yourself optimally informed about the progress that is being made here and with regard to the current technical status of the products, we publish any product changes which differ from the printed version in our electronic product catalogue.

§ We therefore reserve the right to make changes to the data and illustrations in this catalogue. This catalogue reflects the status at the time of printing. More recent publications released by us (as printed or digital media) will automatically precede this catalogue if they involve the same subject. Therefore, please always use our electronic product catalogue to check whether more up-to-date information or modification notices exist for your desired product.

**Link to electronic product catalogue**

The following link will take you to the Schaeffler electronic product catalogue: *https://medias.schaeffler.com*.

## 1.19 Further information

In addition to the data in this chapter, the following chapters in Technical principles must also be observed in the design of bearing arrangements:

- Determining the bearing size ➤*34*
- Rigidity ➤*54*
- Friction and increases in temperature ➤*56*
- Speeds ➤*64*
- Bearing data ➤*97*
- Lubrication ➤*70*
- Sealing ➤*185*
- Design of bearing arrangements ➤*141*
- Mounting and dismounting ➤*194*

# Axial deep groove ball bearings

## Single direction

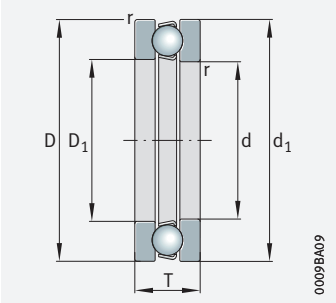


*511, 512, 513, 514*

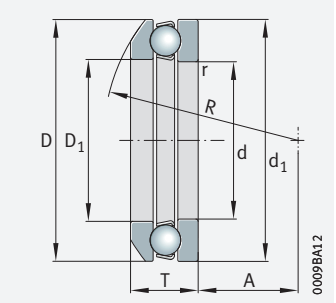


*532, 533*
*Spherical housing locating washer*

## d = 10 – 30 mm

| Main dimensions | | | Basic load ratings | | Fatigue limit load | Minimum load factor | Limiting speed | Speed rating | Mass m | | Designation ➤1058\|1.12 ➤1058\|1.13 | |
|---|---|---|---|---|---|---|---|---|---|---|---|---|
| d | D | T | dyn. $C_a$ N | stat. $C_{0a}$ N | $C_{ua}$ N | A | $n_G$ min$^{-1}$ | $n_{\vartheta r}$ min$^{-1}$ | Bearing ≈ kg | Support washer ≈ kg | Bearing | Support washer |
| **10** | 24 | 9 | 10 000 | 14 000 | 640 | 0,001 | 12 700 | 19 200 | 0,018 | – | **51100** | **–** |
| | 26 | 11 | 12 700 | 17 100 | 780 | 0,002 | 10 900 | 19 100 | 0,03 | – | **51200** | **–** |
| | 26 | 11,6 | 12 700 | 17 100 | 780 | 0,002 | 10 900 | 19 100 | 0,028 | 0,008 | **53200** | **U200** |
| **12** | 26 | 9 | 10 300 | 15 400 | 710 | 0,001 | 13 100 | 16 900 | 0,021 | – | **51101** | **–** |
| | 28 | 11 | 13 200 | 19 000 | 870 | 0,002 | 11 300 | 16 900 | 0,03 | – | **51201** | **–** |
| | 28 | 11,4 | 13 200 | 19 000 | 870 | 0,002 | 11 300 | 16 900 | 0,03 | 0,009 | **53201** | **U201** |
| **15** | 28 | 9 | 10 500 | 16 800 | 770 | 0,002 | 13 100 | 14 000 | 0,027 | – | **51102** | **–** |
| | 32 | 12 | 16 600 | 24 800 | 1 130 | 0,003 | 9 800 | 14 300 | 0,049 | – | **51202** | **–** |
| | 32 | 13,3 | 16 600 | 24 800 | 1 130 | 0,003 | 9 800 | 14 300 | 0,048 | 0,013 | **53202** | **U202** |
| **17** | 30 | 9 | 11 300 | 19 600 | 900 | 0,002 | 12 900 | 12 500 | 0,028 | – | **51103** | **–** |
| | 35 | 12 | 17 200 | 27 500 | 1 240 | 0,004 | 9 700 | 13 200 | 0,052 | – | **51203** | **–** |
| | 35 | 13,2 | 17 200 | 27 500 | 1 240 | 0,004 | 9 700 | 13 200 | 0,055 | 0,015 | **53203** | **U203** |
| **20** | 35 | 10 | 15 000 | 26 500 | 1 210 | 0,004 | 10 900 | 11 100 | 0,04 | – | **51104** | **–** |
| | 40 | 14 | 21 100 | 37 500 | 1 700 | 0,007 | 8 500 | 11 600 | 0,082 | – | **51204** | **–** |
| | 40 | 14,7 | 21 100 | 37 500 | 1 700 | 0,007 | 8 500 | 11 600 | 0,081 | 0,02 | **53204** | **U204** |
| **25** | 42 | 11 | 18 100 | 35 500 | 1 620 | 0,006 | 9 700 | 9 500 | 0,055 | – | **51105** | **–** |
| | 47 | 15 | 26 500 | 50 000 | 2 280 | 0,013 | 7 500 | 9 800 | 0,114 | – | **51205** | **–** |
| | 47 | 16,7 | 26 500 | 50 000 | 2 280 | 0,013 | 7 500 | 9 800 | 0,121 | 0,031 | **53205** | **U205** |
| | 52 | 18 | 34 500 | 55 000 | 2 500 | 0,019 | 6 000 | 10 400 | 0,154 | – | **51305** | **–** |
| | 52 | 19,8 | 34 500 | 55 000 | 2 500 | 0,019 | 6 000 | 10 400 | 0,203 | 0,043 | **53305** | **U305** |
| | 60 | 24 | 43 000 | 66 000 | 3 000 | 0,032 | 4 700 | 10 900 | 0,295 | – | **51405** | **–** |
| **30** | 47 | 11 | 18 800 | 40 000 | 1 820 | 0,008 | 9 300 | 8 100 | 0,063 | – | **51106** | **–** |
| | 52 | 16 | 23 900 | 46 000 | 2 100 | 0,014 | 7 300 | 8 600 | 0,136 | – | **51206** | **–** |
| | 52 | 17,8 | 23 900 | 46 000 | 2 100 | 0,014 | 7 300 | 8 600 | 0,147 | 0,032 | **53206** | **U206** |
| | 60 | 21 | 35 500 | 65 000 | 2 950 | 0,028 | 5 700 | 9 300 | 0,244 | – | **51306** | **–** |
| | 60 | 22,6 | 35 500 | 65 000 | 2 950 | 0,028 | 5 700 | 9 300 | 0,303 | 0,055 | **53306** | **U306** |
| | 70 | 28 | 70 000 | 112 000 | 5 200 | 0,077 | 3 850 | 9 100 | 0,49 | – | **51406** | **–** |

***medias*** *https://www.schaeffler.de/std/1F9A*

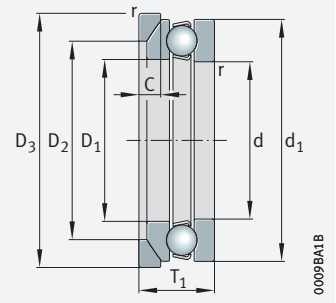


*532, 533*
*Spherical housing locating washer*
*Support washer U2, U3*

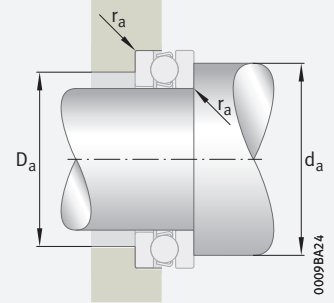


*Mounting dimensions*

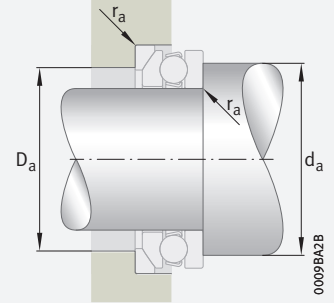


*Mounting dimensions*

| Dimensions | | | | | | | | | | Mounting dimensions | | |
|---|---|---|---|---|---|---|---|---|---|---|---|---|
| d | $D_1$ | $d_1$ | r min. | R | A | $D_2$ | $D_3$ | C | $T_1$ | $d_a$ min. | $D_a$ max. | $r_a$ max. |
| **10** | 11 | 24 | 0,3 | – | – | – | – | – | – | 18 | 16 | 0,3 |
| | 12 | 26 | 0,6 | – | – | – | – | – | – | 20 | 16 | 0,6 |
| | 12 | 26 | 0,6 | 22 | 8,5 | 18 | 28 | 3,5 | 13 | 20 | 18 | 0,6 |
| **12** | 13 | 26 | 0,3 | – | – | – | – | – | – | 20 | 18 | 0,3 |
| | 14 | 28 | 0,6 | – | – | – | – | – | – | 22 | 18 | 0,6 |
| | 14 | 28 | 0,6 | 25 | 11,5 | 20 | 30 | 3,5 | 13 | 22 | 20 | 0,6 |
| **15** | 16 | 28 | 0,3 | – | – | – | – | – | – | 23 | 20 | 0,3 |
| | 17 | 32 | 0,6 | – | – | – | – | – | – | 25 | 22 | 0,6 |
| | 17 | 32 | 0,6 | 28 | 12 | 24 | 35 | 4 | 15 | 25 | 24 | 0,6 |
| **17** | 18 | 30 | 0,3 | – | – | – | – | – | – | 25 | 22 | 0,3 |
| | 19 | 35 | 0,6 | – | – | – | – | – | – | 28 | 24 | 0,6 |
| | 19 | 35 | 0,6 | 32 | 16 | 26 | 38 | 4 | 15 | 28 | 26 | 0,6 |
| **20** | 21 | 35 | 0,3 | – | – | – | – | – | – | 29 | 26 | 0,3 |
| | 22 | 40 | 0,6 | – | – | – | – | – | – | 32 | 28 | 0,6 |
| | 22 | 40 | 0,6 | 36 | 18 | 30 | 42 | 5 | 17 | 32 | 30 | 0,6 |
| **25** | 26 | 42 | 0,6 | – | – | – | – | – | – | 35 | 32 | 0,6 |
| | 27 | 47 | 0,6 | – | – | – | – | – | – | 38 | 34 | 0,6 |
| | 27 | 47 | 0,6 | 40 | 19 | 36 | 50 | 5,5 | 19 | 38 | 36 | 0,6 |
| | 27 | 52 | 1 | – | – | – | – | – | – | 41 | 36 | 1 |
| | 27 | 52 | 1 | 45 | 21 | 38 | 55 | 6 | 22 | 41 | 38 | 1 |
| | 27 | 60 | 1 | – | – | – | – | – | – | 46 | 39 | 1 |
| **30** | 32 | 47 | 0,6 | – | – | – | – | – | – | 40 | 37 | 0,6 |
| | 32 | 52 | 0,6 | – | – | – | – | – | – | 43 | 39 | 0,6 |
| | 32 | 52 | 0,6 | 45 | 22 | 42 | 55 | 5,5 | 20 | 43 | 42 | 0,6 |
| | 32 | 60 | 1 | – | – | – | – | – | – | 48 | 42 | 1 |
| | 32 | 60 | 1 | 50 | 22 | 45 | 62 | 7 | 25 | 48 | 45 | 1 |
| | 32 | 70 | 1 | – | – | – | – | – | – | 54 | 46 | 1 |

# Axial deep groove ball bearings

## Single direction

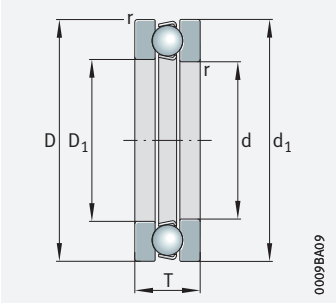


*511, 512, 513, 514*

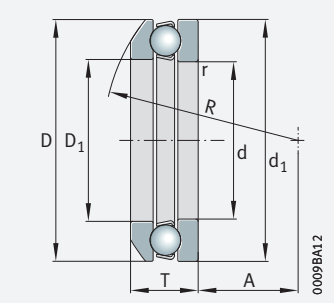


*532, 533*
*Spherical housing locating washer*

## d = 35 – 55 mm

| Main dimensions | | | Basic load ratings | | Fatigue limit load | Minimum load factor | Limiting speed | Speed rating | Mass m | | Designation ➤1058\|1.12 ➤1058\|1.13 | |
|---|---|---|---|---|---|---|---|---|---|---|---|---|
| d | D | T | dyn. $C_a$ | stat. $C_{0a}$ | $C_{ua}$ | A | $n_G$ | $n_{\vartheta r}$ | Bearing | Support washer | Bearing | Support washer |
| | | | N | N | N | | $min^{-1}$ | $min^{-1}$ | ≈ kg | ≈ kg | | |
| **35** | 52 | 12 | 20 000 | 46 500 | 2 120 | 0,011 | 8 800 | 6 800 | 0,089 | – | **51107** | **–** |
| | 62 | 18 | 35 500 | 67 000 | 3 100 | 0,028 | 6 000 | 8 000 | 0,198 | – | **51207** | **–** |
| | 62 | 19,9 | 35 500 | 67 000 | 3 100 | 0,028 | 6 000 | 8 000 | 0,265 | 0,057 | **53207** | **U207** |
| | 68 | 24 | 50 000 | 89 000 | 4 050 | 0,05 | 4 850 | 8 200 | 0,351 | – | **51307** | **–** |
| | 68 | 25,6 | 50 000 | 89 000 | 4 050 | 0,05 | 4 850 | 8 200 | 0,437 | 0,082 | **53307** | **U307** |
| | 80 | 32 | 76 000 | 126 000 | 5 700 | 0,11 | 3 600 | 8 500 | 0,709 | – | **51407** | **–** |
| **40** | 60 | 13 | 25 500 | 62 000 | 2 850 | 0,02 | 7 400 | 6 400 | 0,119 | – | **51108** | **–** |
| | 68 | 19 | 44 000 | 97 000 | 4 400 | 0,05 | 5 500 | 6 900 | 0,257 | – | **51208** | **–** |
| | 68 | 20,3 | 44 000 | 97 000 | 4 400 | 0,05 | 5 500 | 6 900 | 0,259 | 0,07 | **53208** | **U208** |
| | 78 | 26 | 61 000 | 112 000 | 5 100 | 0,081 | 4 250 | 7 600 | 0,536 | – | **51308** | **–** |
| | 78 | 28,5 | 61 000 | 112 000 | 5 100 | 0,081 | 4 250 | 7 600 | 0,561 | 0,114 | **53308** | **U308** |
| | 90 | 36 | 96 000 | 170 000 | 7 700 | 0,18 | 3 250 | 7 600 | 1,03 | – | **51408** | **–** |
| **45** | 65 | 14 | 26 500 | 69 000 | 3 100 | 0,025 | 7 100 | 5 800 | 0,15 | – | **51109** | **–** |
| | 73 | 20 | 39 000 | 80 000 | 3 650 | 0,043 | 5 500 | 6 600 | 0,279 | – | **51209** | **–** |
| | 73 | 21,3 | 39 000 | 80 000 | 3 650 | 0,043 | 5 500 | 6 600 | 0,278 | 0,087 | **53209** | **U209** |
| | 85 | 28 | 75 000 | 140 000 | 6 500 | 0,12 | 3 800 | 6 800 | 0,612 | – | **51309** | **–** |
| | 85 | 30,1 | 75 000 | 140 000 | 6 500 | 0,12 | 3 800 | 6 800 | 0,783 | 0,171 | **53309** | **U309** |
| | 100 | 39 | 123 000 | 222 000 | 10 100 | 0,29 | 2 850 | 6 900 | 1,36 | – | **51409** | **–** |
| **50** | 70 | 14 | 27 000 | 75 000 | 3 400 | 0,029 | 6 800 | 5 200 | 0,162 | – | **51110** | **–** |
| | 78 | 22 | 50 000 | 106 000 | 4 850 | 0,069 | 4 950 | 5 700 | 0,346 | – | **51210** | **–** |
| | 78 | 23,5 | 50 000 | 106 000 | 4 850 | 0,069 | 4 950 | 5 700 | 0,341 | 0,098 | **53210** | **U210** |
| | 95 | 31 | 82 000 | 169 000 | 7 700 | 0,18 | 3 550 | 6 400 | 0,932 | – | **51310** | **–** |
| | 95 | 34,3 | 82 000 | 169 000 | 7 700 | 0,18 | 3 550 | 6 400 | 0,97 | 0,22 | **53310** | **U310** |
| | 110 | 43 | 138 000 | 255 000 | 11 700 | 0,4 | 2 650 | 6 500 | 1,81 | – | **51410** | **–** |
| **55** | 78 | 16 | 30 500 | 75 000 | 3 400 | 0,036 | 6 100 | 5 200 | 0,208 | – | **51111** | **–** |
| | 90 | 25 | 58 000 | 133 000 | 6 000 | 0,11 | 4 350 | 5 700 | 0,382 | – | **51211** | **–** |
| | 90 | 27,3 | 58 000 | 133 000 | 6 000 | 0,11 | 4 350 | 5 700 | 0,609 | 0,152 | **53211** | **U211** |
| | 105 | 35 | 102 000 | 207 000 | 9 500 | 0,26 | 3 200 | 6 000 | 1,3 | – | **51311** | **–** |
| | 105 | 39,3 | 102 000 | 207 000 | 9 500 | 0,26 | 3 200 | 6 000 | 1,38 | 0,27 | **53311** | **U311** |
| | 120 | 48 | 167 000 | 315 000 | 14 400 | 0,59 | 2 340 | 6 000 | 2,83 | – | **51411** | **–** |

***medias*** *https://www.schaeffler.de/std/1F9A*

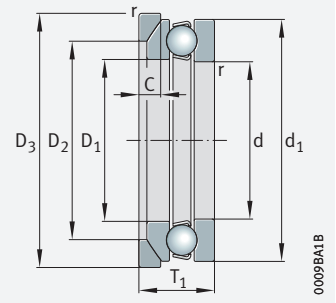


*532, 533*
*Spherical housing locating washer*
*Support washer U2, U3*

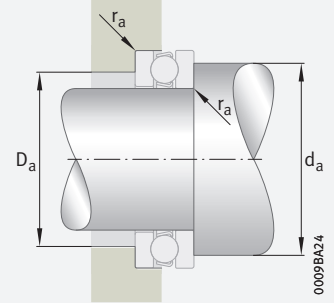


*Mounting dimensions*

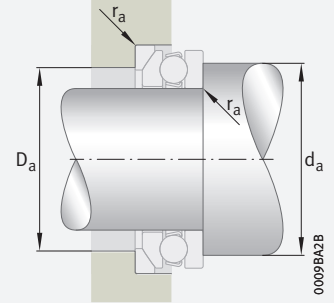


*Mounting dimensions*

| Dimensions | | | | | | | | | | Mounting dimensions | | |
|---|---|---|---|---|---|---|---|---|---|---|---|---|
| d | $D_1$ | $d_1$ | r min. | R | A | $D_2$ | $D_3$ | C | $T_1$ | $d_a$ min. | $D_a$ max. | $r_a$ max. |
| **35** | 37 | 52 | 0,6 | – | – | – | – | – | – | 45 | 42 | 0,6 |
| | 37 | 62 | 1 | – | – | – | – | – | – | 51 | 46 | 1 |
| | 37 | 62 | 1 | 50 | 24 | 48 | 65 | 7 | 22 | 51 | 48 | 1 |
| | 37 | 68 | 1 | – | – | – | – | – | – | 55 | 48 | 1 |
| | 37 | 68 | 1 | 56 | 24 | 52 | 72 | 7,5 | 28 | 55 | 52 | 1 |
| | 37 | 80 | 1,1 | – | – | – | – | – | – | 62 | 53 | 1 |
| **40** | 42 | 60 | 0,6 | – | – | – | – | – | – | 52 | 48 | 0,6 |
| | 42 | 68 | 1 | – | – | – | – | – | – | 57 | 51 | 1 |
| | 42 | 68 | 1 | 56 | 28,5 | 55 | 72 | 7 | 23 | 57 | 55 | 1 |
| | 42 | 78 | 1 | – | – | – | – | – | – | 63 | 55 | 1 |
| | 42 | 78 | 1 | 64 | 28 | 60 | 82 | 8,5 | 31 | 63 | 60 | 1 |
| | 42 | 90 | 1,1 | – | – | – | – | – | – | 70 | 60 | 1 |
| **45** | 47 | 65 | 0,6 | – | – | – | – | – | – | 57 | 53 | 0,6 |
| | 47 | 73 | 1 | – | – | – | – | – | – | 62 | 56 | 1 |
| | 47 | 73 | 1 | 56 | 26 | 60 | 78 | 7,5 | 24 | 62 | 60 | 1 |
| | 47 | 85 | 1 | – | – | – | – | – | – | 69 | 61 | 1 |
| | 47 | 85 | 1 | 64 | 25 | 65 | 90 | 10 | 33 | 69 | 65 | 1 |
| | 47 | 100 | 1,1 | – | – | – | – | – | – | 78 | 67 | 1 |
| **50** | 52 | 70 | 0,6 | – | – | – | – | – | – | 62 | 58 | 0,6 |
| | 52 | 78 | 1 | – | – | – | – | – | – | 67 | 61 | 1 |
| | 52 | 78 | 1 | 64 | 32,5 | 62 | 82 | 7,5 | 26 | 67 | 62 | 1 |
| | 52 | 95 | 1,1 | – | – | – | – | – | – | 77 | 68 | 1 |
| | 52 | 95 | 1,1 | 72 | 28 | 72 | 100 | 11 | 37 | 77 | 72 | 1 |
| | 52 | 110 | 1,5 | – | – | – | – | – | – | 86 | 74 | 1,5 |
| **55** | 57 | 78 | 0,6 | – | – | – | – | – | – | 69 | 64 | 0,6 |
| | 57 | 90 | 1 | – | – | – | – | – | – | 76 | 69 | 1 |
| | 57 | 90 | 1 | 72 | 35 | 72 | 95 | 9 | 30 | 76 | 72 | 1 |
| | 57 | 105 | 1,1 | – | – | – | – | – | – | 85 | 75 | 1 |
| | 57 | 105 | 1,1 | 80 | 30 | 80 | 110 | 11,5 | 42 | 85 | 80 | 1 |
| | 57 | 120 | 1,5 | – | – | – | – | – | – | 94 | 81 | 1,5 |

# Axial deep groove ball bearings

## Single direction

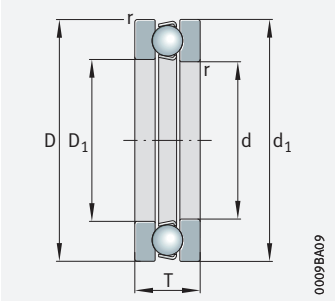


*511, 512, 513, 514*

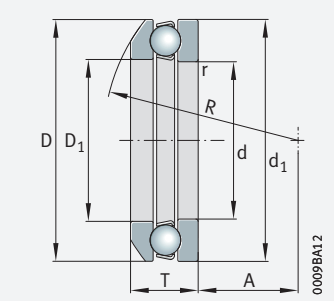


*532, 533*
*Spherical housing locating washer*

## d = 60 – 80 mm

| Main dimensions | | | Basic load ratings | | Fatigue limit load | Minimum load factor | Limiting speed | Speed rating | Mass m | | Designation ➤1058\|1.12 ➤1058\|1.13 | |
|---|---|---|---|---|---|---|---|---|---|---|---|---|
| d | D | T | dyn. $C_a$ N | stat. $C_{0a}$ N | $C_{ua}$ N | A | $n_G$ min$^{-1}$ | $n_{\vartheta r}$ min$^{-1}$ | Bearing ≈ kg | Support washer ≈ kg | Bearing | Support washer |
| **60** | 85 | 17 | 41 500 | 113 000 | 5 200 | 0,065 | 5 500 | 4 650 | 0,278 | – | **51112** | **–** |
| | 95 | 26 | 62 000 | 139 000 | 6 300 | 0,12 | 4 200 | 5 300 | 0,649 | – | **51212** | **–** |
| | 95 | 28 | 62 000 | 139 000 | 6 300 | 0,12 | 4 200 | 5 300 | 0,655 | 0,163 | **53212** | **U212** |
| | 110 | 35 | 101 000 | 207 000 | 9 500 | 0,28 | 3 150 | 5 700 | 1,36 | – | **51312** | **–** |
| | 110 | 38,3 | 101 000 | 207 000 | 9 500 | 0,28 | 3 150 | 5 700 | 1,41 | 0,31 | **53312** | **U312** |
| | 130 | 51 | 201 000 | 395 000 | 18 200 | 0,87 | 2 190 | 5 500 | 3,57 | – | **51412-MP** | **–** |
| **65** | 90 | 18 | 38 500 | 100 000 | 4 550 | 0,063 | 5 300 | 4 450 | 0,3 | – | **51113** | **–** |
| | 100 | 27 | 64 000 | 149 000 | 6 800 | 0,14 | 4 100 | 4 900 | 0,684 | – | **51213** | **–** |
| | 100 | 28,7 | 64 000 | 149 000 | 6 800 | 0,14 | 4 100 | 4 900 | 0,855 | 0,183 | **53213** | **U213** |
| | 115 | 36 | 105 000 | 220 000 | 10 000 | 0,32 | 3 050 | 5 300 | 1,39 | – | **51313** | **–** |
| | 115 | 39,4 | 105 000 | 220 000 | 10 000 | 0,32 | 3 050 | 5 300 | 1,78 | 0,34 | **53313** | **U313** |
| | 140 | 56 | 217 000 | 450 000 | 20 500 | 1,1 | 2 050 | 5 200 | 4,47 | – | **51413-MP** | **–** |
| **70** | 95 | 18 | 40 000 | 110 000 | 5 000 | 0,074 | 5 100 | 4 100 | 0,352 | – | **51114** | **–** |
| | 105 | 27 | 66 000 | 159 000 | 7 200 | 0,16 | 4 000 | 4 550 | 0,727 | – | **51214** | **–** |
| | 105 | 28,8 | 66 000 | 159 000 | 7 200 | 0,16 | 4 000 | 4 550 | 0,903 | 0,185 | **53214** | **U214** |
| | 125 | 40 | 134 000 | 290 000 | 13 300 | 0,51 | 2 750 | 4 950 | 1,9 | – | **51314** | **–** |
| | 125 | 44,2 | 134 000 | 290 000 | 13 300 | 0,51 | 2 750 | 4 950 | 2,09 | 0,4 | **53314** | **U314** |
| | 150 | 60 | 222 000 | 500 000 | 21 700 | 1,4 | 1 920 | 5 000 | 5,49 | – | **51414-MP** | **–** |
| **75** | 100 | 19 | 44 500 | 123 000 | 5 600 | 0,093 | 4 800 | 3 800 | 0,365 | – | **51115** | **–** |
| | 110 | 27 | 67 000 | 169 000 | 7 700 | 0,18 | 3 950 | 4 300 | 0,825 | – | **51215** | **–** |
| | 110 | 28,3 | 67 000 | 169 000 | 7 700 | 0,18 | 3 950 | 4 300 | 1,01 | 0,21 | **53215** | **U215** |
| | 135 | 44 | 163 000 | 360 000 | 15 900 | 0,75 | 2 480 | 4 650 | 2,59 | – | **51315** | **–** |
| | 135 | 48,1 | 163 000 | 360 000 | 15 900 | 0,75 | 2 480 | 4 650 | 3,19 | 0,54 | **53315** | **U315** |
| | 160 | 65 | 238 000 | 560 000 | 23 400 | 1,8 | 1 810 | 4 750 | 6,82 | – | **51415-MP** | **–** |
| **80** | 105 | 19 | 45 000 | 129 000 | 5 900 | 0,1 | 4 650 | 3 600 | 0,384 | – | **51116** | **–** |
| | 115 | 28 | 75 000 | 191 000 | 8 800 | 0,23 | 3 700 | 3 950 | 0,908 | – | **51216** | **–** |
| | 115 | 29,5 | 75 000 | 191 000 | 8 800 | 0,23 | 3 700 | 3 950 | 0,903 | 0,22 | **53216** | **U216** |
| | 140 | 44 | 160 000 | 360 000 | 15 500 | 0,79 | 2 460 | 4 450 | 2,69 | – | **51316** | **–** |
| | 140 | 47,6 | 160 000 | 360 000 | 15 500 | 0,79 | 2 460 | 4 450 | 2,75 | 0,56 | **53316** | **U316** |
| | 170 | 68 | 270 000 | 620 000 | 25 500 | 2,2 | 1 710 | 4 550 | 7,97 | – | **51416-MP** | **–** |

***medias*** *https://www.schaeffler.de/std/1F9A*

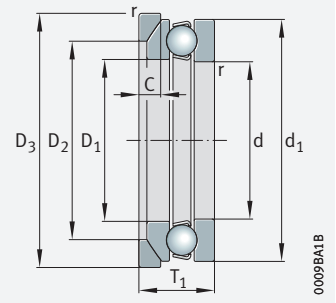


*532, 533*
*Spherical housing locating washer*
*Support washer U2, U3*

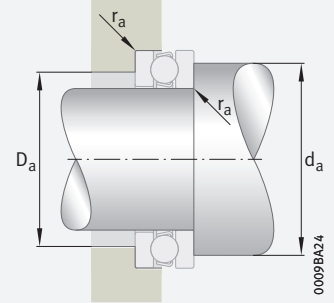


*Mounting dimensions*

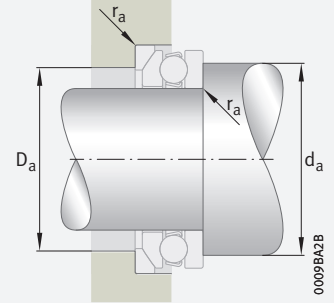


*Mounting dimensions*

| Dimensions | | | | | | | | | | Mounting dimensions | | |
|---|---|---|---|---|---|---|---|---|---|---|---|---|
| d | $D_1$ | $d_1$ | r min. | R | A | $D_2$ | $D_3$ | C | $T_1$ | $d_a$ min. | $D_a$ max. | $r_a$ max. |
| **60** | 62 | 85 | 1 | – | – | – | – | – | – | 75 | 70 | 1 |
| | 62 | 95 | 1 | – | – | – | – | – | – | 81 | 74 | 1 |
| | 62 | 95 | 1 | 72 | 32,5 | 78 | 100 | 9 | 31 | 81 | 78 | 1 |
| | 62 | 110 | 1,1 | – | – | – | – | – | – | 90 | 80 | 1 |
| | 62 | 110 | 1,1 | 90 | 41 | 85 | 115 | 11,5 | 42 | 90 | 85 | 1 |
| | 62 | 130 | 1,5 | – | – | – | – | – | – | 102 | 88 | 1,5 |
| **65** | 67 | 90 | 1 | – | – | – | – | – | – | 80 | 75 | 1 |
| | 67 | 100 | 1 | – | – | – | – | – | – | 86 | 79 | 1 |
| | 67 | 100 | 1 | 80 | 40 | 82 | 105 | 9 | 32 | 86 | 82 | 1 |
| | 67 | 115 | 1,1 | – | – | – | – | – | – | 95 | 85 | 1 |
| | 67 | 115 | 1,1 | 90 | 38,5 | 90 | 120 | 12,5 | 43 | 95 | 90 | 1 |
| | 68 | 140 | 2 | – | – | – | – | – | – | 110 | 95 | 2 |
| **70** | 72 | 95 | 1 | – | – | – | – | – | – | 85 | 80 | 1 |
| | 72 | 105 | 1 | – | – | – | – | – | – | 91 | 84 | 1 |
| | 72 | 105 | 1 | 80 | 38 | 88 | 110 | 9 | 32 | 91 | 88 | 1 |
| | 72 | 125 | 1,1 | – | – | – | – | – | – | 103 | 92 | 1 |
| | 72 | 125 | 1,1 | 100 | 43 | 98 | 130 | 13 | 48 | 103 | 98 | 1 |
| | 73 | 150 | 2 | – | – | – | – | – | – | 118 | 102 | 2 |
| **75** | 77 | 100 | 1 | – | – | – | – | – | – | 90 | 85 | 1 |
| | 77 | 110 | 1 | – | – | – | – | – | – | 96 | 89 | 1 |
| | 77 | 110 | 1 | 90 | 49 | 92 | 115 | 9,5 | 32 | 96 | 92 | 1 |
| | 77 | 135 | 1,5 | – | – | – | – | – | – | 111 | 99 | 1,5 |
| | 77 | 135 | 1,5 | 100 | 37 | 105 | 140 | 15 | 52 | 111 | 105 | 1,5 |
| | 78 | 160 | 2 | – | – | – | – | – | – | 126 | 109 | 2 |
| **80** | 82 | 105 | 1 | – | – | – | – | – | – | 95 | 90 | 1 |
| | 82 | 115 | 1 | – | – | – | – | – | – | 101 | 94 | 1 |
| | 82 | 115 | 1 | 90 | 46 | 98 | 120 | 10 | 33 | 101 | 98 | 1 |
| | 82 | 140 | 1,5 | – | – | – | – | – | – | 116 | 104 | 1,5 |
| | 82 | 140 | 1,5 | 112 | 50 | 110 | 145 | 15 | 52 | 116 | 110 | 1,5 |
| | 83 | 170 | 2,1 | – | – | – | – | – | – | 134 | 116 | 2,1 |

# Axial deep groove ball bearings

## Single direction

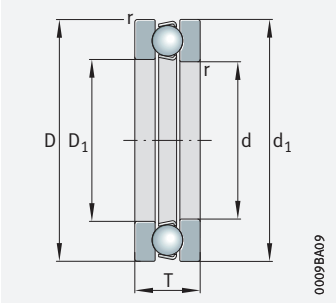


*511, 512, 513, 514*

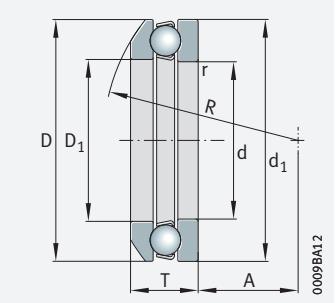


*532, 533*
*Spherical housing locating washer*

## d = 85 – 120 mm

| Main dimensions | | | Basic load ratings | | Fatigue limit load | Minimum load factor | Limiting speed | Speed rating | Mass m | | Designation ➤1058\|1.12 ➤1058\|1.13 | |
|---|---|---|---|---|---|---|---|---|---|---|---|---|
| d | D | T | dyn. $C_a$ N | stat. $C_{0a}$ N | $C_{ua}$ N | A | $n_G$ min$^{-1}$ | $n_{\vartheta r}$ min$^{-1}$ | Bearing ≈ kg | Support washer ≈ kg | Bearing | Support washer |
| **85** | 110 | 19 | 45 500 | 134 000 | 6 200 | 0,11 | 4 500 | 3 400 | 0,404 | – | **51117** | **–** |
| | 125 | 31 | 98 000 | 250 000 | 11 200 | 0,37 | 3 250 | 3 850 | 1,21 | – | **51217** | **–** |
| | 125 | 33,1 | 98 000 | 250 000 | 11 200 | 0,37 | 3 250 | 3 850 | 1,22 | 0,29 | **53217** | **U217** |
| | 150 | 49 | 186 000 | 420 000 | 17 700 | 1,1 | 2 260 | 4 250 | 3,48 | – | **51317** | **–** |
| | 150 | 53,1 | 186 000 | 420 000 | 17 700 | 1,1 | 2 260 | 4 250 | 3,51 | 0,8 | **53317** | **U317** |
| | 180 | 72 | 305 000 | 750 000 | 30 000 | 3 | 1 620 | 4 250 | 9,3 | – | **51417-MP** | **–** |
| **90** | 120 | 22 | 45 500 | 140 000 | 6 300 | 0,12 | 4 300 | 3 500 | 0,617 | – | **51118** | **–** |
| | 135 | 35 | 119 000 | 300 000 | 13 000 | 0,54 | 2 900 | 3 750 | 1,66 | – | **51218** | **–** |
| | 135 | 38,5 | 119 000 | 300 000 | 13 000 | 0,54 | 2 900 | 3 750 | 1,7 | 0,42 | **53218** | **U218** |
| | 155 | 50 | 193 000 | 455 000 | 18 800 | 1,2 | 2 240 | 4 050 | 3,75 | – | **51318** | **–** |
| | 155 | 54,6 | 193 000 | 455 000 | 18 800 | 1,2 | 2 240 | 4 050 | 3,81 | 0,82 | **53318** | **U318** |
| | 190 | 77 | 325 000 | 830 000 | 32 000 | 3,7 | 1 540 | 4 100 | 11,2 | – | **51418-MP** | **–** |
| **100** | 135 | 25 | 85 000 | 270 000 | 11 300 | 0,36 | 3 500 | 3 100 | 0,992 | – | **51120** | **–** |
| | 150 | 38 | 119 000 | 325 000 | 13 300 | 0,68 | 2 700 | 3 600 | 2,21 | – | **51220** | **–** |
| | 150 | 40,9 | 119 000 | 325 000 | 13 300 | 0,68 | 2 700 | 3 600 | 2,23 | 0,5 | **53220** | **U220** |
| | 170 | 55 | 238 000 | 580 000 | 23 200 | 1,9 | 1 970 | 3 650 | 4,94 | – | **51320** | **–** |
| | 170 | 59,2 | 238 000 | 580 000 | 23 200 | 1,9 | 1 970 | 3 650 | 4,99 | 0,93 | **53320** | **U320** |
| | 210 | 85 | 375 000 | 1 060 000 | 38 500 | 6 | 1 350 | 3 650 | 15 | – | **51420-MP** | **–** |
| **110** | 145 | 25 | 87 000 | 290 000 | 11 600 | 0,42 | 3 350 | 2 800 | 1,08 | – | **51122** | **–** |
| | 160 | 38 | 126 000 | 365 000 | 14 400 | 0,83 | 2 650 | 3 250 | 2,28 | – | **51222** | **–** |
| | 160 | 40,2 | 126 000 | 365 000 | 14 400 | 0,83 | 2 650 | 3 250 | 2,24 | 0,56 | **53222** | **U222** |
| | 190 | 63 | 280 000 | 740 000 | 28 000 | 3 | 1 790 | 3 400 | 7,85 | – | **51322-MP** | **–** |
| | 190 | 67,2 | 280 000 | 740 000 | 28 000 | 3 | 1 790 | 3 400 | 7,85 | 1,26 | **53322-MP** | **U322** |
| | 230 | 95 | 405 000 | 1 130 000 | 39 500 | 7,1 | 1 300 | 3 400 | 20 | – | **51422-MP** | **–** |
| **120** | 155 | 25 | 89 000 | 310 000 | 12 000 | 0,49 | 3 200 | 2 600 | 1,16 | – | **51124** | **–** |
| | 170 | 39 | 128 000 | 385 000 | 14 600 | 0,94 | 2 550 | 3 000 | 2,66 | – | **51224** | **–** |
| | 170 | 40,8 | 128 000 | 385 000 | 14 600 | 0,94 | 2 550 | 3 000 | 2,58 | 0,65 | **53224** | **U224** |
| | 210 | 70 | 325 000 | 910 000 | 32 500 | 4,4 | 1 610 | 3 200 | 10,7 | – | **51324-MP** | **–** |
| | 210 | 74,1 | 325 000 | 910 000 | 32 500 | 4,4 | 1 610 | 3 200 | 10,6 | 2,01 | **53324-MP** | **U324** |
| | 250 | 102 | 455 000 | 1 340 000 | 45 000 | 10 | 1 180 | 3 050 | 25,4 | – | **51424-MP** | **–** |

***medias*** *https://www.schaeffler.de/std/1F9A*

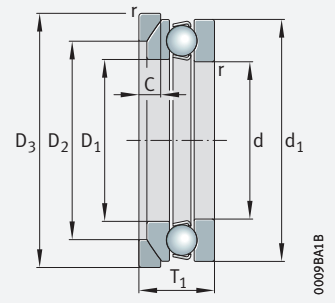


*532, 533*
*Spherical housing locating washer*
*Support washer U2, U3*

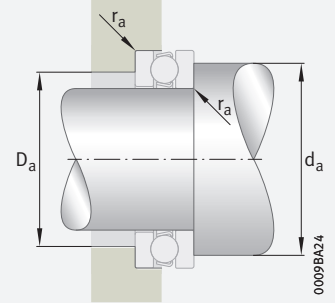


*Mounting dimensions*

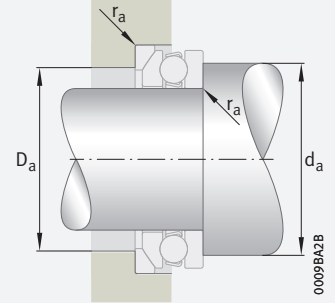


*Mounting dimensions*

| Dimensions | | | | | | | | | | Mounting dimensions | | |
|---|---|---|---|---|---|---|---|---|---|---|---|---|
| d | $D_1$ | $d_1$ | r<br>min. | R | A | $D_2$ | $D_3$ | C | $T_1$ | $d_a$<br>min. | $D_a$<br>max. | $r_a$<br>max. |
| **85** | 87 | 110 | 1 | – | – | – | – | – | – | 100 | 95 | 1 |
| | 88 | 125 | 1 | – | – | – | – | – | – | 109 | 101 | 1 |
| | 88 | 125 | 1 | 100 | 52 | 105 | 130 | 11 | 37 | 109 | 105 | 1 |
| | 88 | 150 | 1,5 | – | – | – | – | – | – | 124 | 111 | 1,5 |
| | 88 | 150 | 1,5 | 112 | 43 | 115 | 155 | 17,5 | 58 | 124 | 115 | 1,5 |
| | 88 | 177 | 2,1 | – | – | – | – | – | – | 142 | 123 | 2,1 |
| **90** | 92 | 120 | 1 | – | – | – | – | – | – | 108 | 102 | 1 |
| | 93 | 135 | 1,1 | – | – | – | – | – | – | 117 | 108 | 1 |
| | 93 | 135 | 1,1 | 100 | 45 | 110 | 140 | 13,5 | 42 | 117 | 110 | 1 |
| | 93 | 155 | 1,5 | – | – | – | – | – | – | 129 | 116 | 1,5 |
| | 93 | 155 | 1,5 | 112 | 40 | 120 | 160 | 18 | 59 | 129 | 120 | 1,5 |
| | 93 | 187 | 2,1 | – | – | – | – | – | – | 150 | 130 | 2,1 |
| **100** | 102 | 135 | 1 | – | – | – | – | – | – | 121 | 114 | 1 |
| | 103 | 150 | 1,1 | – | – | – | – | – | – | 130 | 120 | 1 |
| | 103 | 150 | 1,1 | 112 | 52 | 125 | 155 | 14 | 45 | 130 | 125 | 1 |
| | 103 | 170 | 1,5 | – | – | – | – | – | – | 142 | 128 | 1,5 |
| | 103 | 170 | 1,5 | 125 | 46 | 135 | 175 | 18 | 64 | 142 | 135 | 1,5 |
| | 103 | 205 | 3 | – | – | – | – | – | – | 166 | 144 | 2,5 |
| **110** | 112 | 145 | 1 | – | – | – | – | – | – | 131 | 124 | 1 |
| | 113 | 160 | 1,1 | – | – | – | – | – | – | 140 | 130 | 1 |
| | 113 | 160 | 1,1 | 125 | 65 | 135 | 165 | 14 | 45 | 140 | 135 | 1 |
| | 113 | 187 | 2 | – | – | – | – | – | – | 158 | 142 | 2 |
| | 113 | 187 | 2 | 140 | 51 | 150 | 195 | 20,5 | 72 | 158 | 150 | 2 |
| | 113 | 225 | 3 | – | – | – | – | – | – | 182 | 158 | 2,5 |
| **120** | 122 | 155 | 1 | – | – | – | – | – | – | 141 | 134 | 1 |
| | 123 | 170 | 1,1 | – | – | – | – | – | – | 150 | 140 | 1 |
| | 123 | 170 | 1,1 | 125 | 61 | 145 | 175 | 15 | 46 | 150 | 145 | 1 |
| | 123 | 205 | 2,1 | – | – | – | – | – | – | 174 | 156 | 2,1 |
| | 123 | 205 | 2,1 | 160 | 63 | 165 | 220 | 22 | 80 | 174 | 165 | 2,1 |
| | 123 | 245 | 4 | – | – | – | – | – | – | 198 | 172 | 3 |

# Axial deep groove ball bearings

## Single direction

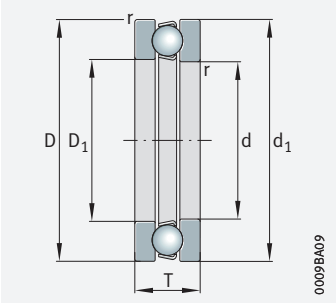


*511, 512, 513, 514*

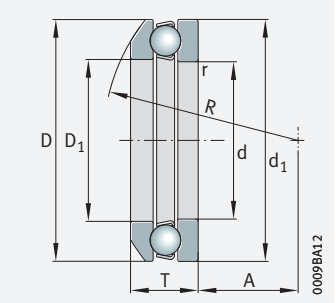


*532, 533*
*Spherical housing locating washer*

## d = 130 – 180 mm

| Main dimensions | | | Basic load ratings | | Fatigue limit load | Minimum load factor | Limiting speed | Speed rating | Mass m | | Designation ➤1058\|1.12 ➤1058\|1.13 | |
|---|---|---|---|---|---|---|---|---|---|---|---|---|
| d | D | T | dyn. $C_a$ | stat. $C_{0a}$ | $C_{ua}$ | A | $n_G$ | $n_{\vartheta r}$ | Bearing | Support washer | Bearing | Support washer |
| | | | N | N | N | | $min^{-1}$ | $min^{-1}$ | ≈ kg | ≈ kg | | |
| **130** | 170 | 30 | 111 000 | 390 000 | 14 600 | 0,76 | 2 850 | 2 490 | 1,75 | – | **51126** | **–** |
| | 190 | 45 | 184 000 | 540 000 | 19 500 | 1,7 | 2 210 | 2 850 | 3,96 | – | **51226** | **–** |
| | 190 | 47,9 | 184 000 | 540 000 | 19 500 | 1,7 | 2 210 | 2 850 | 3,9 | 0,9 | **53226** | **U226** |
| | 225 | 75 | 360 000 | 1 050 000 | 36 000 | 5,9 | 1 490 | 2 950 | 13 | – | **51326-MP** | **–** |
| | 270 | 110 | 560 000 | 1 750 000 | 57 000 | 16 | 1 030 | 2 650 | 32 | – | **51426-MP** | **–** |
| **140** | 180 | 31 | 111 000 | 400 000 | 14 600 | 0,83 | 2 750 | 2 330 | 1,9 | – | **51128** | **–** |
| | 200 | 46 | 191 000 | 570 000 | 19 800 | 1,9 | 2 110 | 2 700 | 4,3 | – | **51228** | **–** |
| | 200 | 48,6 | 191 000 | 570 000 | 19 800 | 1,9 | 2 110 | 2 700 | 4,25 | 1,22 | **53228** | **U228** |
| | 240 | 80 | 385 000 | 1 240 000 | 41 000 | 8,2 | 1 360 | 2 700 | 15,6 | – | **51328-MP** | **–** |
| | 240 | 84,9 | 385 000 | 1 240 000 | 41 000 | 8,2 | 1 360 | 2 700 | 15,5 | 2,92 | **53328-MP** | **U328** |
| **150** | 190 | 31 | 109 000 | 400 000 | 14 200 | 0,89 | 2 650 | 2 200 | 2,17 | – | **51130-MP** | **–** |
| | 215 | 50 | 236 000 | 730 000 | 24 900 | 2,9 | 1 950 | 2 500 | 6,08 | – | **51230-MP** | **–** |
| | 215 | 53,3 | 236 000 | 730 000 | 24 900 | 2,9 | 1 950 | 2 500 | 5,95 | 1,69 | **53230-MP** | **U230** |
| | 250 | 80 | 395 000 | 1 330 000 | 43 000 | 9,3 | 1 340 | 2 480 | 16,2 | – | **51330-MP** | **–** |
| | 250 | 83,7 | 395 000 | 1 330 000 | 43 000 | 9,3 | 1 340 | 2 480 | 12,8 | 3,11 | **53330-MP** | **U330** |
| **160** | 200 | 31 | 112 000 | 425 000 | 14 600 | 1 | 2 550 | 2 060 | 2,29 | – | **51132-MP** | **–** |
| | 225 | 51 | 240 000 | 770 000 | 25 500 | 3,2 | 1 900 | 2 350 | 6,53 | – | **51232-MP** | **–** |
| | 225 | 54,7 | 240 000 | 770 000 | 25 500 | 3,2 | 1 900 | 2 350 | 6,45 | 1,8 | **53232-MP** | **U232** |
| | 270 | 87 | 445 000 | 1 560 000 | 48 500 | 13 | 1 230 | 2 280 | 21,2 | – | **51332-MP** | **–** |
| | 270 | 91,7 | 445 000 | 1 560 000 | 48 500 | 13 | 1 230 | 2 280 | 20,8 | 4 | **53332-MP** | **U332** |
| **170** | 215 | 34 | 127 000 | 510 000 | 16 700 | 1,4 | 2 330 | 2 010 | 3,02 | – | **51134-MP** | **–** |
| | 240 | 55 | 285 000 | 930 000 | 29 500 | 4,5 | 1 740 | 2 230 | 8,12 | – | **51234-MP** | **–** |
| | 240 | 58,7 | 285 000 | 930 000 | 29 500 | 4,5 | 1 740 | 2 230 | 7,91 | 2,14 | **53234-MP** | **U234** |
| | 280 | 87 | 440 000 | 1 560 000 | 47 500 | 13 | 1 220 | 2 170 | 22,2 | – | **51334-MP** | **–** |
| | 280 | 91,3 | 440 000 | 1 560 000 | 47 500 | 13 | 1 220 | 2 170 | 21,6 | 4,42 | **53334-MP** | **U334** |
| **180** | 225 | 34 | 127 000 | 520 000 | 16 800 | 1,5 | 2 250 | 1 910 | 3,06 | – | **51136-MP** | **–** |
| | 250 | 56 | 305 000 | 1 030 000 | 32 500 | 5,4 | 1 670 | 2 080 | 8,56 | – | **51236-MP** | **–** |
| | 250 | 58,2 | 305 000 | 1 030 000 | 32 500 | 5,4 | 1 670 | 2 080 | 8,19 | 2,33 | **53236-MP** | **U236** |
| | 300 | 95 | 520 000 | 1 830 000 | 54 000 | 18 | 1 130 | 2 000 | 24,8 | – | **51336-MP** | **–** |
| | 300 | 99,3 | 520 000 | 1 830 000 | 54 000 | 18 | 1 130 | 2 000 | 24,1 | 5,32 | **53336-MP** | **U336** |

***medias*** *https://www.schaeffler.de/std/1F9A*

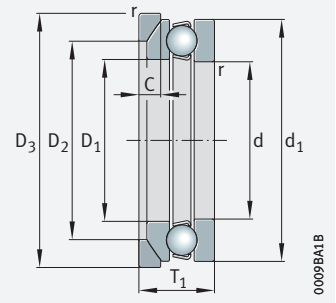


*532, 533*
*Spherical housing locating washer*
*Support washer U2, U3*

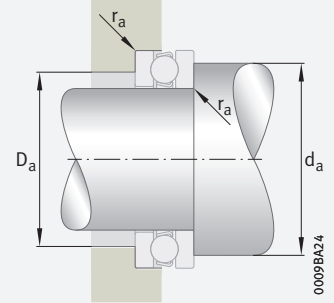


*Mounting dimensions*

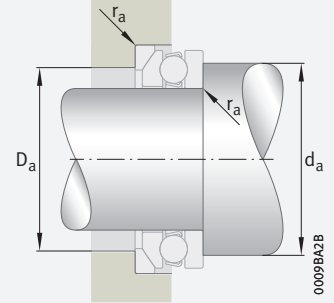


*Mounting dimensions*

| Dimensions | | | | | | | | | | Mounting dimensions | | |
|---|---|---|---|---|---|---|---|---|---|---|---|---|
| d | $D_1$ | $d_1$ | r<br>min. | R | A | $D_2$ | $D_3$ | C | $T_1$ | $d_a$<br>min. | $D_a$<br>max. | $r_a$<br>max. |
| **130** | 132 | 170 | 1 | – | – | – | – | – | – | 154 | 146 | 1 |
| | 133 | 187 | 1,5 | – | – | – | – | – | – | 166 | 154 | 1,5 |
| | 133 | 187 | 1,5 | 140 | 67 | 160 | 195 | 17 | 53 | 166 | 160 | 1,5 |
| | 134 | 220 | 2,1 | – | – | – | – | – | – | 187 | 168 | 2,1 |
| | 134 | 265 | 4 | – | – | – | – | – | – | 214 | 186 | 3 |
| **140** | 142 | 178 | 1 | – | – | – | – | – | – | 164 | 156 | 1 |
| | 143 | 197 | 1,5 | – | – | – | – | – | – | 176 | 164 | 1,5 |
| | 143 | 197 | 1,5 | 160 | 87 | 170 | 210 | 17 | 55 | 176 | 170 | 1,5 |
| | 144 | 235 | 2,1 | – | – | – | – | – | – | 200 | 180 | 2,1 |
| | 144 | 235 | 2,1 | 180 | 68 | 190 | 250 | 26 | 92 | 200 | 190 | 2,1 |
| **150** | 152 | 188 | 1 | – | – | – | – | – | – | 174 | 166 | 1 |
| | 153 | 212 | 1,5 | – | – | – | – | – | – | 189 | 176 | 1,5 |
| | 153 | 212 | 1,5 | 160 | 79 | 180 | 225 | 20,5 | 60 | 189 | 180 | 1,5 |
| | 154 | 245 | 2,1 | – | – | – | – | – | – | 210 | 190 | 2,1 |
| | 154 | 245 | 2,1 | 200 | 89,5 | 200 | 260 | 26 | 92 | 210 | 200 | 2,1 |
| **160** | 162 | 198 | 1 | – | – | – | – | – | – | 184 | 176 | 1 |
| | 163 | 222 | 1,5 | – | – | – | – | – | – | 199 | 186 | 1,5 |
| | 163 | 222 | 1,5 | 160 | 74 | 190 | 235 | 21 | 61 | 199 | 190 | 1,5 |
| | 164 | 265 | 3 | – | – | – | – | – | – | 226 | 204 | 2,5 |
| | 164 | 265 | 3 | 200 | 77 | 215 | 280 | 29 | 100 | 226 | 215 | 2,5 |
| **170** | 172 | 213 | 1,1 | – | – | – | – | – | – | 197 | 188 | 1 |
| | 173 | 237 | 1,5 | – | – | – | – | – | – | 212 | 198 | 1,5 |
| | 173 | 237 | 1,5 | 180 | 91 | 200 | 250 | 21,5 | 65 | 212 | 200 | 1,5 |
| | 174 | 275 | 3 | – | – | – | – | – | – | 236 | 214 | 2,5 |
| | 174 | 275 | 3 | 225 | 105 | 220 | 290 | 29 | 100 | 236 | 220 | 2,5 |
| **180** | 183 | 222 | 1,1 | – | – | – | – | – | – | 207 | 198 | 1 |
| | 183 | 245 | 1,5 | – | – | – | – | – | – | 222 | 208 | 1,5 |
| | 183 | 245 | 1,5 | 200 | 112 | 210 | 260 | 21,5 | 66 | 222 | 210 | 1,5 |
| | 184 | 295 | 3 | – | – | – | – | – | – | 252 | 228 | 2,5 |
| | 184 | 295 | 3 | 225 | 91 | 240 | 310 | 32 | 109 | 252 | 240 | 2,5 |

# Axial deep groove ball bearings

## Single direction

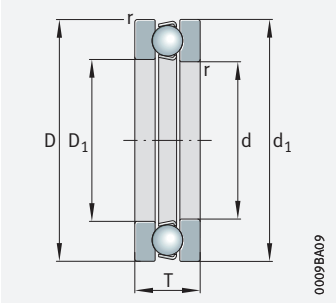


*511, 512, 513*

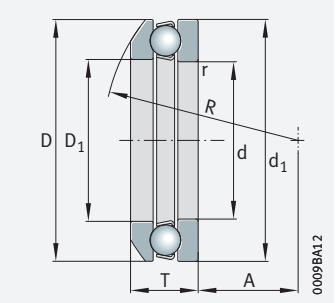


*532, 533*
*Spherical housing locating washer*

## d = 190 – 260 mm

| Main dimensions | | | Basic load ratings | | Fatigue limit load | Minimum load factor | Limiting speed | Speed rating | Mass m | | Designation ➤1058\|1.12 ➤1058\|1.13 | |
|---|---|---|---|---|---|---|---|---|---|---|---|---|
| d | D | T | dyn. $C_a$ | stat. $C_{0a}$ | $C_{ua}$ | A | $n_G$ | $n_{\vartheta r}$ | Bearing | Support washer | Bearing | Support washer |
| | | | N | N | N | | $min^{-1}$ | $min^{-1}$ | ≈ kg | ≈ kg | | |
| **190** | 240 | 37 | 161 000 | 650 000 | 20 200 | 2,3 | 2 040 | 1 850 | 4,06 | – | **51138-MP** | **–** |
| | 270 | 62 | 335 000 | 1 170 000 | 35 500 | 7,2 | 1 540 | 2 010 | 11,6 | – | **51238-MP** | **–** |
| | 270 | 65,7 | 335 000 | 1 170 000 | 35 500 | 7,2 | 1 540 | 2 010 | 11,5 | 2,63 | **53238-MP** | **U238** |
| | 320 | 105 | 590 000 | 2 170 000 | 63 000 | 24 | 1 040 | 1 840 | 36,7 | – | **51338-MP** | **–** |
| | 320 | 111 | 590 000 | 2 170 000 | 63 000 | 24 | 1 040 | 1 840 | 36,5 | 6,16 | **53338-MP** | **U338** |
| **200** | 250 | 37 | 162 000 | 670 000 | 20 400 | 2,5 | 1 980 | 1 760 | 4,12 | – | **51140-MP** | **–** |
| | 280 | 62 | 340 000 | 1 220 000 | 36 000 | 7,8 | 1 510 | 1 890 | 12 | – | **51240-MP** | **–** |
| | 280 | 65,3 | 340 000 | 1 220 000 | 36 000 | 7,8 | 1 510 | 1 890 | 11,8 | 2,79 | **53240-MP** | **U240** |
| **220** | 270 | 37 | 168 000 | 730 000 | 21 300 | 3 | 1 870 | 1 600 | 4,54 | – | **51144-MP** | **–** |
| | 300 | 63 | 335 000 | 1 330 000 | 37 500 | 9,6 | 1 420 | 1 690 | 13,1 | – | **51244-MP** | **–** |
| | 300 | 65,6 | 335 000 | 1 330 000 | 37 500 | 9,6 | 1 420 | 1 690 | 13,1 | 3,31 | **53244-MP** | **U244** |
| **240** | 300 | 45 | 237 000 | 990 000 | 27 500 | 5,2 | 1 640 | 1 540 | 7,41 | – | **51148-MP** | **–** |
| **260** | 320 | 45 | 245 000 | 1 070 000 | 29 000 | 6,1 | 1 560 | 1 390 | 7,89 | – | **51152-MP** | **–** |

***medias*** *https://www.schaeffler.de/std/1F9A*

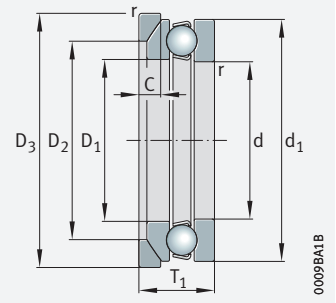


*532, 533*
*Spherical housing locating washer*
*Support washer U2, U3*

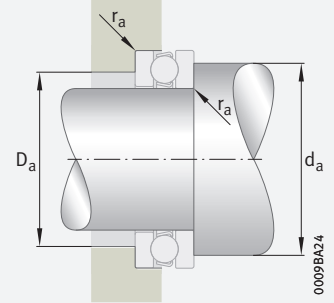


*Mounting dimensions*

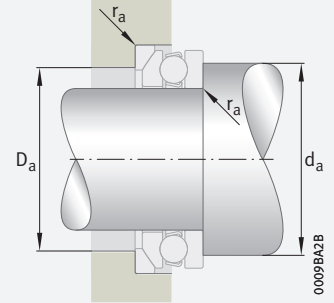


*Mounting dimensions*

| Dimensions | | | | | | | | | | Mounting dimensions | | |
|---|---|---|---|---|---|---|---|---|---|---|---|---|
| d | $D_1$ | $d_1$ | r<br>min. | R | A | $D_2$ | $D_3$ | C | $T_1$ | $d_a$<br>min. | $D_a$<br>max. | $r_a$<br>max. |
| **190** | 193 | 237 | 1,1 | – | – | – | – | – | – | 220 | 210 | 1 |
| | 194 | 265 | 2 | – | – | – | – | – | – | 238 | 222 | 2 |
| | 195 | 265 | 2 | 200 | 98 | 230 | 280 | 23 | 73 | 238 | 230 | 2 |
| | 195 | 315 | 4 | – | – | – | – | – | – | 268 | 242 | 3 |
| | 195 | 315 | 4 | 250 | 104 | 255 | 330 | 33 | 121 | 268 | 255 | 3 |
| **200** | 203 | 247 | 1,1 | – | – | – | – | – | – | 230 | 220 | 1 |
| | 204 | 275 | 2 | – | – | – | – | – | – | 248 | 232 | 2 |
| | 204 | 275 | 2 | 225 | 125 | 240 | 290 | 23 | 74 | 248 | 240 | 2 |
| **220** | 223 | 267 | 1,1 | – | – | – | – | – | – | 250 | 240 | 1 |
| | 224 | 295 | 2 | – | – | – | – | – | – | 268 | 252 | 2 |
| | 224 | 295 | 2 | 225 | 118 | 260 | 310 | 25 | 75 | 268 | 260 | 2 |
| **240** | 243 | 297 | 1,5 | – | – | – | – | – | – | 276 | 264 | 1,5 |
| **260** | 263 | 317 | 1,5 | – | – | – | – | – | – | 296 | 284 | 1,5 |

# Axial deep groove ball bearings

## Double direction

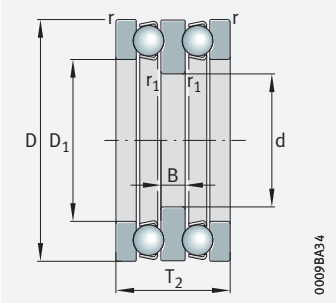


*522, 523*

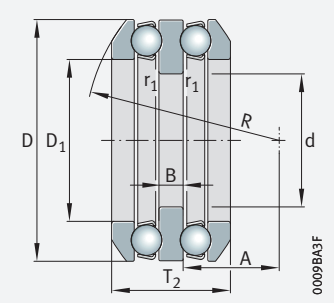


*542, 543*
*Spherical housing locating washers*

## d = 10 – 40 mm

| Main dimensions | | | Basic load ratings | | Fatigue limit load | Minimum load factor | Limiting speed | Speed rating | Mass m | | Designation ➤1058\|1.12 ➤1058\|1.13 | |
|---|---|---|---|---|---|---|---|---|---|---|---|---|
| d | D | $T_2$ | dyn. $C_a$ | stat. $C_{0a}$ | $C_{ua}$ | A | $n_G$ | $n_{\vartheta r}$ | Bearing | Support washer | Bearing | Support washer |
| | | | N | N | N | | $min^{-1}$ | $min^{-1}$ | ≈ kg | ≈ kg | | |
| **10** | 32 | 22 | 16 600 | 24 800 | 1 130 | 0,003 | 9 800 | 13 700 | 0,085 | – | **52202** | **–** |
| **15** | 40 | 26 | 21 100 | 37 500 | 1 700 | 0,007 | 8 500 | 11 100 | 0,15 | – | **52204** | **–** |
| **20** | 47 | 28 | 26 500 | 50 000 | 2 280 | 0,013 | 7 500 | 9 400 | 0,23 | – | **52205** | **–** |
| | 47 | 31,4 | 26 500 | 50 000 | 2 280 | 0,013 | 7 500 | 9 400 | 0,221 | 0,031 | **54205** | **U205** |
| | 52 | 34 | 34 500 | 55 000 | 2 500 | 0,019 | 6 000 | 9 700 | 0,29 | – | **52305** | **–** |
| | 52 | 37,6 | 34 500 | 55 000 | 2 500 | 0,019 | 6 000 | 9 700 | 0,303 | 0,043 | **54305** | **U305** |
| | 70 | 52 | 70 000 | 112 000 | 5 200 | 0,077 | 3 850 | 8 700 | 0,912 | – | **52406** | **–** |
| **25** | 52 | 29 | 23 900 | 46 000 | 2 100 | 0,014 | 7 300 | 8 200 | 0,249 | – | **52206** | **–** |
| | 52 | 32,6 | 23 900 | 46 000 | 2 100 | 0,014 | 7 300 | 8 200 | 0,269 | 0,032 | **54206** | **U206** |
| | 60 | 38 | 35 500 | 65 000 | 2 950 | 0,028 | 5 700 | 8 600 | 0,435 | – | **52306** | **–** |
| | 60 | 41,2 | 35 500 | 65 000 | 2 950 | 0,028 | 5 700 | 8 600 | 0,553 | 0,055 | **54306** | **U306** |
| | 80 | 59 | 76 000 | 126 000 | 5 700 | 0,11 | 3 600 | 8 000 | 1,44 | – | **52407** | **–** |
| **30** | 62 | 34 | 35 500 | 67 000 | 3 100 | 0,028 | 6 000 | 7 500 | 0,405 | – | **52207** | **–** |
| | 62 | 37,8 | 35 500 | 67 000 | 3 100 | 0,028 | 6 000 | 7 500 | 0,423 | 0,082 | **54207** | **U207** |
| | 68 | 36 | 44 000 | 97 000 | 4 400 | 0,05 | 5 500 | 6 900 | 0,54 | – | **52208** | **–** |
| | 68 | 44 | 50 000 | 89 000 | 4 050 | 0,05 | 4 850 | 7 600 | 0,63 | – | **52307** | **–** |
| | 68 | 38,6 | 44 000 | 97 000 | 4 400 | 0,05 | 5 500 | 6 900 | 0,513 | 0,07 | **54208** | **U208** |
| | 68 | 47,2 | 50 000 | 89 000 | 4 050 | 0,05 | 4 850 | 7 600 | 0,683 | 0,082 | **54307** | **U307** |
| | 78 | 49 | 61 000 | 112 000 | 5 100 | 0,081 | 4 250 | 7 200 | 1,02 | – | **52308** | **–** |
| | 78 | 54 | 61 000 | 112 000 | 5 100 | 0,081 | 4 250 | 7 200 | 1,1 | 0,114 | **54308** | **U308** |
| | 90 | 65 | 96 000 | 170 000 | 7 700 | 0,18 | 3 250 | 7 100 | 2,03 | – | **52408** | **–** |
| **35** | 73 | 37 | 39 000 | 80 000 | 3 650 | 0,043 | 5 500 | 6 500 | 0,58 | – | **52209** | **–** |
| | 73 | 39,6 | 39 000 | 80 000 | 3 650 | 0,043 | 5 500 | 6 500 | 0,537 | 0,087 | **54209** | **U209** |
| | 85 | 52 | 75 000 | 140 000 | 6 500 | 0,12 | 3 800 | 6 500 | 1,24 | – | **52309** | **–** |
| | 85 | 56,2 | 75 000 | 140 000 | 6 500 | 0,12 | 3 800 | 6 500 | 1,28 | 0,171 | **54309** | **U309** |
| | 100 | 72 | 123 000 | 222 000 | 10 100 | 0,29 | 2 850 | 6 500 | 2,71 | – | **52409** | **–** |
| **40** | 78 | 39 | 50 000 | 106 000 | 4 850 | 0,069 | 4 950 | 5 800 | 0,684 | – | **52210** | **–** |
| | 78 | 42 | 50 000 | 106 000 | 4 850 | 0,069 | 4 950 | 5 800 | 0,625 | 0,098 | **54210** | **U210** |
| | 95 | 58 | 82 000 | 169 000 | 7 700 | 0,18 | 3 550 | 6 100 | 1,76 | – | **52310** | **–** |
| | 95 | 64,6 | 82 000 | 169 000 | 7 700 | 0,18 | 3 550 | 6 100 | 1,84 | 0,22 | **54310** | **U310** |
| | 110 | 78 | 138 000 | 255 000 | 11 700 | 0,4 | 2 650 | 6 000 | 3,56 | – | **52410** | **–** |

***medias*** *https://www.schaeffler.de/std/1F9A*

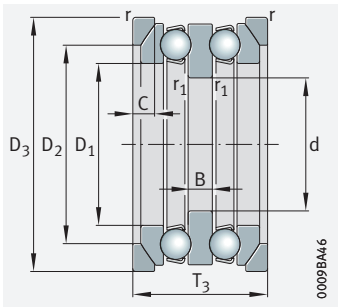


*542, 543*
*Spherical housing locating washers*
*Support washers U2, U3*

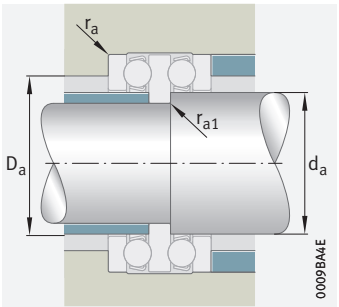


*Mounting dimensions*

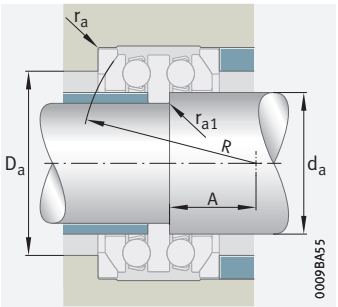


*Mounting dimensions*

| Dimensions | | | | | | | | | | | Mounting dimensions | | | |
|---|---|---|---|---|---|---|---|---|---|---|---|---|---|---|
| d | $D_1$ | B | r<br>min. | $r_1$<br>min. | R | A | $D_2$ | $D_3$ | C | $T_3$ | $d_a$ | $D_a$<br>max. | $r_a$<br>max. | $r_{a1}$<br>max. |
| **10** | 17 | 5 | 0,6 | 0,3 | – | – | – | – | – | – | 15 | 22 | 0,6 | 0,3 |
| **15** | 22 | 6 | 0,6 | 0,3 | – | – | – | – | – | – | 20 | 28 | 0,6 | 0,3 |
| **20** | 27 | 7 | 0,6 | 0,3 | – | – | – | – | – | – | 25 | 34 | 0,6 | 0,3 |
| | 27 | 7 | 0,6 | 0,3 | 40 | 16,5 | 36 | 50 | 5,5 | 36 | 25 | 36 | 0,6 | 0,3 |
| | 27 | 8 | 1 | 0,3 | – | – | – | – | – | – | 25 | 36 | 1 | 0,3 |
| | 27 | 8 | 1 | 0,3 | 45 | 18 | 42 | 55 | 6 | 38 | 25 | 38 | 1 | 0,3 |
| | 32 | 12 | 1 | 0,6 | – | – | – | – | – | – | 30 | 46 | 1 | 0,6 |
| **25** | 32 | 7 | 0,6 | 0,3 | – | – | – | – | – | – | 30 | 39 | 0,6 | 0,3 |
| | 32 | 7 | 0,6 | 0,3 | 45 | 20 | 37 | 55 | 5,5 | 42 | 30 | 42 | 0,6 | 0,3 |
| | 32 | 9 | 1 | 0,3 | – | – | – | – | – | – | 30 | 42 | 1 | 0,3 |
| | 32 | 9 | 1 | 0,3 | 50 | 19,5 | 46 | 62 | 7 | 45 | 30 | 45 | 1 | 0,3 |
| | 37 | 14 | 1,1 | 0,6 | – | – | – | – | – | – | 35 | 53 | 1 | 0,6 |
| **30** | 37 | 8 | 1 | 0,3 | – | – | – | – | – | – | 35 | 46 | 1 | 0,3 |
| | 37 | 8 | 1 | 0,3 | 50 | 21 | 42 | 72 | 7,5 | 52 | 35 | 48 | 1 | 0,3 |
| | 42 | 9 | 1 | 0,6 | – | – | – | – | – | – | 40 | 51 | 1 | 0,6 |
| | 37 | 10 | 1 | 0,3 | – | – | – | – | – | – | 35 | 48 | 1 | 0,3 |
| | 42 | 9 | 1 | 0,6 | 56 | 25 | 44 | 72 | 7 | 55 | 40 | 55 | 1 | 0,6 |
| | 37 | 10 | 1 | 0,3 | 56 | 21 | 52 | 72 | 7,5 | 52 | 35 | 52 | 1 | 0,3 |
| | 42 | 12 | 1 | 0,6 | – | – | – | – | – | – | 40 | 55 | 1 | 0,6 |
| | 42 | 12 | 1 | 0,6 | 64 | 23,5 | 59 | 82 | 8,5 | 60 | 40 | 60 | 1 | 0,6 |
| | 42 | 15 | 1,1 | 0,6 | – | – | – | – | – | – | 40 | 60 | 1 | 0,6 |
| **35** | 47 | 9 | 1 | 0,6 | – | – | – | – | – | – | 45 | 56 | 1 | 0,6 |
| | 47 | 9 | 1 | 0,6 | 56 | 23 | 45 | 78 | 7,5 | 60 | 45 | 60 | 1 | 0,6 |
| | 47 | 12 | 1 | 0,6 | – | – | – | – | – | – | 45 | 61 | 1 | 0,6 |
| | 47 | 12 | 1 | 0,6 | 64 | 21 | 62 | 90 | 10 | 65 | 45 | 65 | 1 | 0,6 |
| | 47 | 17 | 1,1 | 0,6 | – | – | – | – | – | – | 45 | 67 | 1 | 0,6 |
| **40** | 52 | 9 | 1 | 0,6 | – | – | – | – | – | – | 50 | 61 | 1 | 0,6 |
| | 52 | 9 | 1 | 0,6 | 64 | 30,5 | 47 | 82 | 7,5 | 62 | 50 | 62 | 1 | 0,6 |
| | 52 | 14 | 1,1 | 0,6 | – | – | – | – | – | – | 50 | 68 | 1 | 0,6 |
| | 52 | 14 | 1,1 | 0,6 | 72 | 23 | 70 | 100 | 11 | 72 | 50 | 72 | 1 | 0,6 |
| | 52 | 18 | 1,5 | 0,6 | – | – | – | – | – | – | 50 | 74 | 1,5 | 0,6 |

# Axial deep groove ball bearings

## Double direction

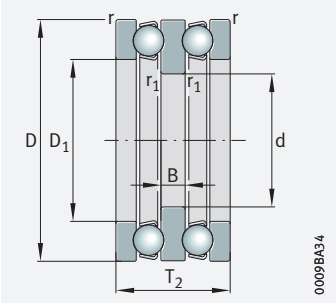


*522, 523*

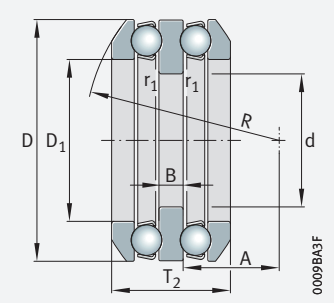


*542, 543*
*Spherical housing locating washers*

## d = 45 – 70 mm

| Main dimensions | | | Basic load ratings | | Fatigue limit load | Minimum load factor | Limiting speed | Speed rating | Mass m | | Designation ➤1058\|1.12 ➤1058\|1.13 | |
|---|---|---|---|---|---|---|---|---|---|---|---|---|
| d | D | $T_2$ | dyn. $C_a$ | stat. $C_{0a}$ | $C_{ua}$ | A | $n_G$ | $n_{\vartheta r}$ | Bearing | Support washer | Bearing | Support washer |
| | | | N | N | N | | $min^{-1}$ | $min^{-1}$ | ≈ kg | ≈ kg | | |
| **45** | 90 | 45 | 58 000 | 133 000 | 6 000 | 0,11 | 4 350 | 5 600 | 1,05 | – | **52211** | **–** |
| | 90 | 49,6 | 58 000 | 133 000 | 6 000 | 0,11 | 4 350 | 5 600 | 1,02 | 0,152 | **54211** | **U211** |
| | 105 | 64 | 102 000 | 207 000 | 9 500 | 0,26 | 3 200 | 5 700 | 2,37 | – | **52311** | **–** |
| | 105 | 72,6 | 102 000 | 207 000 | 9 500 | 0,26 | 3 200 | 5 700 | 2,53 | 0,27 | **54311** | **U311** |
| | 120 | 87 | 167 000 | 315 000 | 14 400 | 0,59 | 2 340 | 5 600 | 4,7 | – | **52411** | **–** |
| **50** | 95 | 46 | 62 000 | 139 000 | 6 300 | 0,12 | 4 200 | 5 200 | 1,1 | – | **52212** | **–** |
| | 95 | 50 | 62 000 | 139 000 | 6 300 | 0,12 | 4 200 | 5 200 | 1,17 | 0,163 | **54212** | **U212** |
| | 110 | 64 | 101 000 | 207 000 | 9 500 | 0,28 | 3 150 | 5 400 | 2,49 | – | **52312** | **–** |
| | 110 | 70,6 | 101 000 | 207 000 | 9 500 | 0,28 | 3 150 | 5 400 | 2,59 | 0,31 | **54312** | **U312** |
| | 115 | 70,6 | 101 000 | 207 000 | 9 500 | 0,28 | 3 150 | 5 800 | 2,98 | 0,34 | **54313** | **U313** |
| **55** | 100 | 47 | 64 000 | 149 000 | 6 800 | 0,14 | 4 100 | 4 800 | 1,28 | – | **52213** | **–** |
| | 100 | 50,4 | 64 000 | 149 000 | 6 800 | 0,14 | 4 100 | 4 800 | 1,53 | 0,183 | **54213** | **U213** |
| | 105 | 47 | 66 000 | 159 000 | 7 200 | 0,16 | 4 000 | 4 750 | 1,4 | – | **52214** | **–** |
| | 105 | 50,6 | 66 000 | 159 000 | 7 200 | 0,16 | 4 000 | 4 750 | 1,46 | 0,185 | **54214** | **U214** |
| | 115 | 65 | 105 000 | 220 000 | 10 000 | 0,32 | 3 050 | 5 000 | 2,68 | – | **52313** | **–** |
| | 125 | 72 | 134 000 | 290 000 | 13 300 | 0,51 | 2 750 | 4 800 | 3,55 | – | **52314** | **–** |
| | 125 | 80,4 | 134 000 | 290 000 | 13 300 | 0,51 | 2 750 | 4 800 | 3,77 | 0,4 | **54314** | **U314** |
| **60** | 110 | 47 | 67 000 | 169 000 | 7 700 | 0,18 | 3 950 | 4 450 | 1,45 | – | **52215** | **–** |
| | 110 | 49,6 | 67 000 | 169 000 | 7 700 | 0,18 | 3 950 | 4 450 | 1,87 | 0,21 | **54215** | **U215** |
| | 135 | 79 | 163 000 | 360 000 | 15 900 | 0,75 | 2 480 | 4 500 | 4,72 | – | **52315** | **–** |
| | 135 | 87,2 | 163 000 | 360 000 | 15 900 | 0,75 | 2 480 | 4 500 | 4,98 | 0,54 | **54315** | **U315** |
| **65** | 115 | 48 | 75 000 | 191 000 | 8 800 | 0,23 | 3 700 | 4 150 | 1,55 | – | **52216** | **–** |
| | 115 | 51 | 75 000 | 191 000 | 8 800 | 0,23 | 3 700 | 4 150 | 1,6 | 0,22 | **54216** | **U216** |
| | 140 | 79 | 160 000 | 360 000 | 15 500 | 0,79 | 2 460 | 4 350 | 4,82 | – | **52316** | **–** |
| | 140 | 86,2 | 160 000 | 360 000 | 15 500 | 0,79 | 2 460 | 4 350 | 5,22 | 0,56 | **54316** | **U316** |
| **70** | 125 | 55 | 98 000 | 250 000 | 11 200 | 0,37 | 3 250 | 3 950 | 2,23 | – | **52217** | **–** |
| | 125 | 59,2 | 98 000 | 250 000 | 11 200 | 0,37 | 3 250 | 3 950 | 2,25 | 0,29 | **54217** | **U217** |
| | 150 | 87 | 186 000 | 420 000 | 17 700 | 1,1 | 2 260 | 4 150 | 6,2 | – | **52317** | **–** |
| | 150 | 95,2 | 186 000 | 420 000 | 17 700 | 1,1 | 2 260 | 4 150 | 6,41 | 0,8 | **54317** | **U317** |

***medias*** *https://www.schaeffler.de/std/1F9A*

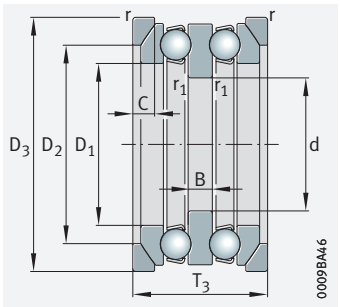


542, 543
Spherical housing locating washers
Support washers U2, U3

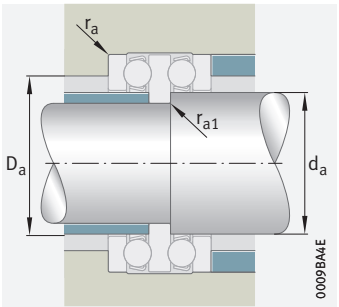


Mounting dimensions

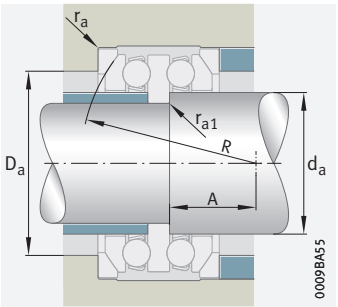


Mounting dimensions

| Dimensions | | | | | | | | | | | Mounting dimensions | | | |
|---|---|---|---|---|---|---|---|---|---|---|---|---|---|---|
| d | $D_1$ | B | r<br>min. | $r_1$<br>min. | R | A | $D_2$ | $D_3$ | C | $T_3$ | $d_a$ | $D_a$<br>max. | $r_a$<br>max. | $r_{a1}$<br>max. |
| **45** | 57 | 10 | 1 | 0,6 | – | – | – | – | – | – | 55 | 69 | 1 | 0,6 |
| | 57 | 10 | 1 | 0,6 | 72 | 32,5 | 55 | 95 | 9 | 72 | 55 | 72 | 1 | 0,6 |
| | 57 | 15 | 1,1 | 0,6 | – | – | – | – | – | – | 55 | 75 | 1 | 0,6 |
| | 57 | 15 | 1,1 | 0,6 | 80 | 25,5 | 78 | 110 | 11,5 | 80 | 55 | 80 | 1 | 0,6 |
| | 57 | 20 | 1,5 | 0,6 | – | – | – | – | – | – | 55 | 81 | 1,5 | 0,6 |
| **50** | 62 | 10 | 1 | 0,6 | – | – | – | – | – | – | 60 | 74 | 1 | 0,6 |
| | 62 | 10 | 1 | 0,6 | 72 | 30,5 | 56 | 100 | 9 | 78 | 60 | 78 | 1 | 0,6 |
| | 62 | 15 | 1,1 | 0,6 | – | – | – | – | – | – | 60 | 80 | 1 | 0,6 |
| | 62 | 15 | 1,1 | 0,6 | 90 | 36,5 | 78 | 115 | 11,5 | 85 | 60 | 85 | 1 | 0,6 |
| | 67 | 15 | 1,1 | 0,6 | 90 | 34,5 | 79 | 120 | 12,5 | 90 | 60 | 85 | 1 | 0,6 |
| **55** | 67 | 10 | 1 | 0,6 | – | – | – | – | – | – | 65 | 79 | 1 | 0,6 |
| | 67 | 10 | 1 | 0,6 | 80 | 38,5 | 57 | 105 | 9 | 82 | 65 | 82 | 1 | 0,6 |
| | 72 | 10 | 1 | 1 | – | – | – | – | – | – | 70 | 84 | 1 | 1 |
| | 72 | 10 | 1 | 1 | 80 | 36,5 | 57 | 110 | 9 | 88 | 70 | 88 | 1 | 1 |
| | 67 | 15 | 1,1 | 0,6 | – | – | – | – | – | – | 65 | 85 | 1 | 0,6 |
| | 72 | 16 | 1,1 | 1 | – | – | – | – | – | – | 70 | 92 | 1 | 1 |
| | 72 | 16 | 1,1 | 1 | 100 | 39 | 88 | 130 | 13 | 98 | 70 | 98 | 1 | 1 |
| **60** | 77 | 10 | 1 | 1 | – | – | – | – | – | – | 75 | 89 | 1 | 1 |
| | 77 | 10 | 1 | 1 | 90 | 47,5 | 57 | 115 | 9,5 | 92 | 75 | 92 | 1 | 1 |
| | 77 | 18 | 1,5 | 1 | – | – | – | – | – | – | 75 | 99 | 1,5 | 1 |
| | 77 | 18 | 1,5 | 1 | 100 | 32,5 | 95 | 140 | 15 | 105 | 75 | 105 | 1,5 | 1 |
| **65** | 82 | 10 | 1 | 1 | – | – | – | – | – | – | 80 | 94 | 1 | 1 |
| | 82 | 10 | 1 | 1 | 90 | 45 | 58 | 120 | 10 | 98 | 80 | 98 | 1 | 1 |
| | 82 | 18 | 1,5 | 1 | – | – | – | – | – | – | 80 | 104 | 1,5 | 1 |
| | 82 | 18 | 1,5 | 1 | 112 | 45,5 | 95 | 145 | 15 | 110 | 80 | 110 | 1,5 | 1 |
| **70** | 88 | 12 | 1 | 1 | – | – | – | – | – | – | 85 | 101 | 1 | 1 |
| | 88 | 12 | 1 | 1 | 100 | 49,5 | 67 | 130 | 11 | 105 | 85 | 105 | 1 | 1 |
| | 88 | 19 | 1,5 | 1 | – | – | – | – | – | – | 85 | 111 | 1,5 | 1 |
| | 88 | 19 | 1,5 | 1 | 112 | 39 | 105 | 155 | 17,5 | 115 | 85 | 115 | 1,5 | 1 |

# Axial deep groove ball bearings

## Double direction

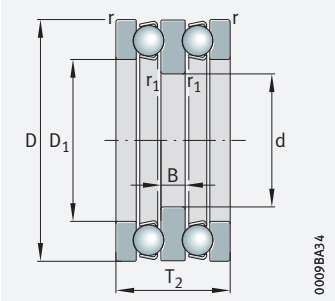


*522, 523*

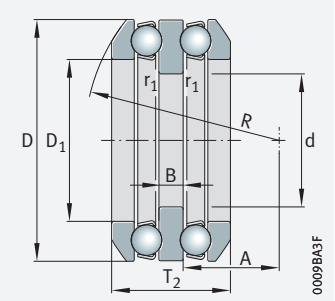


*542, 543*
*Spherical housing locating washers*

## d = 75 – 130 mm

| Main dimensions | | | Basic load ratings | | Fatigue limit load | Minimum load factor | Limiting speed | Speed rating | Mass m | | Designation ➤1058\|1.12 ➤1058\|1.13 | |
|---|---|---|---|---|---|---|---|---|---|---|---|---|
| d | D | $T_2$ | dyn. $C_a$ N | stat. $C_{0a}$ N | $C_{ua}$ N | A | $n_G$ $min^{-1}$ | $n_{\vartheta r}$ $min^{-1}$ | Bearing ≈ kg | Support washer ≈ kg | Bearing | Support washer |
| **75** | 135 | 62 | 119 000 | 300 000 | 13 000 | 0,54 | 2 900 | 3 800 | 3,05 | – | **52218** | **–** |
| | 135 | 69 | 119 000 | 300 000 | 13 000 | 0,54 | 2 900 | 3 800 | 3,11 | 0,42 | **54218** | **U218** |
| | 155 | 88 | 193 000 | 455 000 | 18 800 | 1,2 | 2 240 | 3 900 | 6,62 | – | **52318** | **–** |
| | 155 | 97,2 | 193 000 | 455 000 | 18 800 | 1,2 | 2 240 | 3 900 | 6,76 | 0,82 | **54318** | **U318** |
| **85** | 150 | 67 | 119 000 | 325 000 | 13 300 | 0,68 | 2 700 | 3 550 | 3,95 | – | **52220** | **–** |
| | 150 | 72,8 | 119 000 | 325 000 | 13 300 | 0,68 | 2 700 | 3 550 | 3,87 | 0,5 | **54220** | **U220** |
| | 170 | 97 | 238 000 | 580 000 | 23 200 | 1,9 | 1 970 | 3 550 | 8,71 | – | **52320** | **–** |
| | 170 | 105,4 | 238 000 | 580 000 | 23 200 | 1,9 | 1 970 | 3 550 | 8,93 | 0,93 | **54320** | **U320** |
| **95** | 160 | 67 | 126 000 | 365 000 | 14 400 | 0,83 | 2 650 | 3 250 | 4,06 | – | **52222** | **–** |
| | 160 | 71,4 | 126 000 | 365 000 | 14 400 | 0,83 | 2 650 | 3 250 | 4,55 | 0,56 | **54222** | **U222** |
| | 190 | 110 | 280 000 | 740 000 | 28 000 | 3 | 1 790 | 3 300 | 14 | – | **52322-MP** | **–** |
| | 190 | 118,4 | 280 000 | 740 000 | 28 000 | 3 | 1 790 | 3 300 | 13,7 | 1,26 | **54322-MP** | **U322** |
| **100** | 170 | 68 | 128 000 | 385 000 | 14 600 | 0,94 | 2 550 | 3 100 | 4,82 | – | **52224** | **–** |
| | 170 | 71,6 | 128 000 | 385 000 | 14 600 | 0,94 | 2 550 | 3 100 | 4,66 | 0,65 | **54224** | **U224** |
| | 210 | 123 | 325 000 | 910 000 | 32 500 | 4,4 | 1 610 | 3 100 | 19,3 | – | **52324-MP** | **–** |
| | 210 | 131,2 | 325 000 | 910 000 | 32 500 | 4,4 | 1 610 | 3 100 | 18,8 | 2,01 | **54324-MP** | **U324** |
| **110** | 190 | 80 | 184 000 | 540 000 | 19 500 | 1,7 | 2 210 | 2 950 | 7,26 | – | **52226** | **–** |
| | 190 | 85,8 | 184 000 | 540 000 | 19 500 | 1,7 | 2 210 | 2 950 | 7,51 | 0,9 | **54226** | **U226** |
| **120** | 200 | 81 | 191 000 | 570 000 | 19 800 | 1,9 | 2 110 | 2 750 | 7,9 | – | **52228** | **–** |
| | 200 | 86,2 | 191 000 | 570 000 | 19 800 | 1,9 | 2 110 | 2 750 | 16,9 | 1,22 | **54228** | **U228** |
| | 240 | 140 | 385 000 | 1 240 000 | 41 000 | 8,2 | 1 360 | 2 550 | 28,3 | – | **52328-MP** | **–** |
| **130** | 215 | 89 | 236 000 | 730 000 | 24 900 | 2,9 | 1 950 | 2 550 | 11,46 | – | **52230-MP** | **–** |
| | 215 | 95,6 | 236 000 | 730 000 | 24 900 | 2,9 | 1 950 | 2 550 | 10,4 | 1,69 | **54230-MP** | **U230** |
| | 250 | 140 | 395 000 | 1 330 000 | 43 000 | 9,3 | 1 340 | 2 360 | 29,4 | – | **52330-MP** | **–** |

***medias*** *https://www.schaeffler.de/std/1F9A*

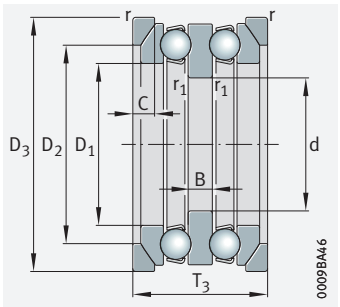


*542, 543*
*Spherical housing locating washers*
*Support washers U2, U3*

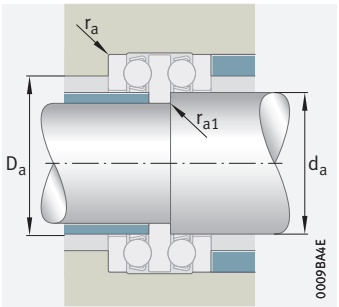


*Mounting dimensions*

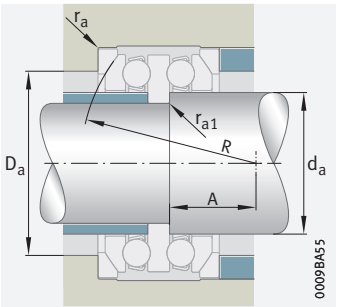


*Mounting dimensions*

| Dimensions | | | | | | | | | | | Mounting dimensions | | | |
|---|---|---|---|---|---|---|---|---|---|---|---|---|---|---|
| d | $D_1$ | B | r<br>min. | $r_1$<br>min. | R | A | $D_2$ | $D_3$ | C | $T_3$ | $d_a$ | $D_a$<br>max. | $r_a$<br>max. | $r_{a1}$<br>max. |
| **75** | 93 | 14 | 1,1 | 1 | – | – | – | – | – | – | 90 | 108 | 1 | 1 |
| | 93 | 14 | 1,1 | 1 | 100 | 42 | 76 | 140 | 13,5 | 110 | 90 | 110 | 1 | 1 |
| | 93 | 19 | 1,5 | 1 | – | – | – | – | – | – | 90 | 116 | 1,5 | 1 |
| | 93 | 19 | 1,5 | 1 | 112 | 36,5 | 106 | 160 | 18 | 120 | 90 | 120 | 1,5 | 1 |
| **85** | 103 | 15 | 1,1 | 1 | – | – | – | – | – | – | 100 | 120 | 1 | 1 |
| | 103 | 15 | 1,1 | 1 | 112 | 49 | 81 | 155 | 14 | 125 | 100 | 125 | 1 | 1 |
| | 103 | 21 | 1,5 | 1 | – | – | – | – | – | – | 100 | 128 | 1,5 | 1 |
| | 103 | 21 | 1,5 | 1 | 125 | 42 | 115 | 175 | 18 | 135 | 100 | 135 | 1,5 | 1 |
| **95** | 113 | 15 | 1,1 | 1 | – | – | – | – | – | – | 110 | 130 | 1 | 1 |
| | 113 | 15 | 1,1 | 1 | 125 | 62 | 81 | 165 | 14 | 135 | 110 | 135 | 1 | 1 |
| | 113 | 24 | 2 | 1 | – | – | – | – | – | – | 110 | 142 | 2 | 1 |
| | 113 | 24 | 2 | 1 | 140 | 47 | 128 | 195 | 20,5 | 150 | 110 | 150 | 2 | 1 |
| **100** | 123 | 15 | 1,1 | 1,1 | – | – | – | – | – | – | 120 | 140 | 1 | 1 |
| | 123 | 15 | 1,1 | 1,1 | 125 | 58,5 | 82 | 175 | 15 | 145 | 120 | 145 | 1 | 1 |
| | 123 | 27 | 2,1 | 1,1 | – | – | – | – | – | – | 120 | 156 | 2,1 | 1 |
| | 123 | 27 | 2,1 | 1,1 | 160 | 58 | 143 | 220 | 22 | 165 | 120 | 165 | 2,1 | 1 |
| **110** | 133 | 18 | 1,5 | 1,1 | – | – | – | – | – | – | 130 | 154 | 1,5 | 1 |
| | 133 | 18 | 1,5 | 1,1 | 140 | 63 | 96 | 195 | 17 | 160 | 130 | 160 | 1,5 | 1 |
| **120** | 143 | 18 | 1,5 | 1,1 | – | – | – | – | – | – | 140 | 164 | 1,5 | 1 |
| | 143 | 18 | 1,5 | 1,1 | 160 | 83,5 | 99 | 210 | 17 | 170 | 140 | 170 | 1,5 | 1 |
| | 144 | 31 | 2,1 | 1,1 | – | – | – | – | – | – | 140 | 180 | 2,1 | 1 |
| **130** | 153 | 20 | 1,5 | 1,1 | – | – | – | – | – | – | 150 | 176 | 1,5 | 1 |
| | 153 | 20 | 1,5 | 1,1 | 160 | 74,5 | 109 | 225 | 20,5 | 180 | 150 | 180 | 1,5 | 1 |
| | 154 | 31 | 2,1 | 1,1 | – | – | – | – | – | – | 150 | 190 | 2,1 | 1 |

# Axial deep groove ball bearings

## Double direction

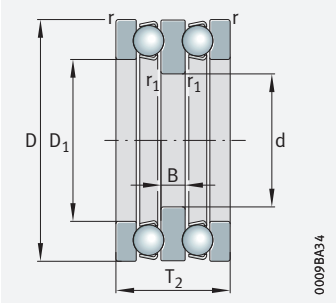


*522, 523*

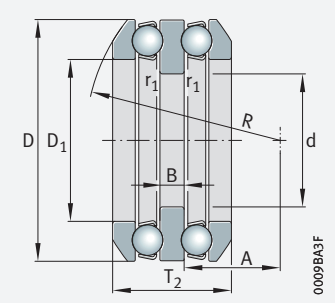


*542*
*Spherical housing locating washers*

## d = 140 – 190 mm

| Main dimensions | | | Basic load ratings | | Fatigue limit load | Minimum load factor | Limiting speed | Speed rating | Mass m | | Designation ➤1058\|1.12 ➤1058\|1.13 | |
|---|---|---|---|---|---|---|---|---|---|---|---|---|
| d | D | $T_2$ | dyn. $C_a$ | stat. $C_{0a}$ | $C_{ua}$ | A | $n_G$ | $n_{\vartheta r}$ | Bearing | Support washer | Bearing | Support washer |
| | | | N | N | N | | $min^{-1}$ | $min^{-1}$ | ≈ kg | ≈ kg | | |
| **140** | 225 | 90 | 240 000 | 770 000 | 25 500 | 3,2 | 1 900 | 2 400 | 12,2 | – | **52232-MP** | **–** |
| | 225 | 97,4 | 240 000 | 770 000 | 25 500 | 3,2 | 1 900 | 2 400 | 11,2 | 1,8 | **54232-MP** | **U232** |
| | 270 | 153 | 445 000 | 1 560 000 | 48 500 | 13 | 1 230 | 2 160 | 38,2 | – | **52332-MP** | **–** |
| **150** | 240 | 97 | 285 000 | 930 000 | 29 500 | 4,5 | 1 740 | 2 210 | 14 | – | **52234-MP** | **–** |
| | 240 | 104,4 | 285 000 | 930 000 | 29 500 | 4,5 | 1 740 | 2 210 | 13,6 | 2,14 | **54234-MP** | **U234** |
| | 250 | 98 | 305 000 | 1 030 000 | 32 500 | 5,4 | 1 670 | 2 120 | 16,2 | – | **52236-MP** | **–** |
| | 250 | 102,4 | 305 000 | 1 030 000 | 32 500 | 5,4 | 1 670 | 2 120 | 15,5 | 2,33 | **54236-MP** | **U236** |
| | 280 | 153 | 440 000 | 1 560 000 | 47 500 | 13 | 1 220 | 2 060 | 39,9 | – | **52334-MP** | **–** |
| **160** | 270 | 109 | 335 000 | 1 170 000 | 35 500 | 7,2 | 1 540 | 1 990 | 21,9 | – | **52238-MP** | **–** |
| | 270 | 116,4 | 335 000 | 1 170 000 | 35 500 | 7,2 | 1 540 | 1 990 | 20 | 2,63 | **54238-MP** | **U238** |
| | 320 | 183 | 590 000 | 2 170 000 | 63 000 | 24 | 1 040 | 1 770 | 66,4 | – | **52338-MP** | **–** |
| **170** | 280 | 109 | 340 000 | 1 220 000 | 36 000 | 7,8 | 1 510 | 1 880 | 23,2 | – | **52240-MP** | **–** |
| | 280 | 115,6 | 340 000 | 1 220 000 | 36 000 | 7,8 | 1 510 | 1 880 | 21 | 2,79 | **54240-MP** | **U240** |
| **190** | 300 | 110 | 335 000 | 1 330 000 | 37 500 | 9,6 | 1 420 | 1 680 | 25,2 | – | **52244-MP** | **–** |
| | 300 | 115,2 | 335 000 | 1 330 000 | 37 500 | 9,6 | 1 420 | 1 680 | 23 | 3,31 | **54244-MP** | **U244** |

***medias*** *https://www.schaeffler.de/std/1F9A*

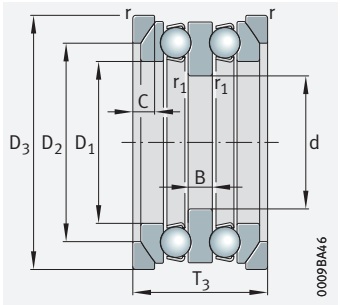


542
Spherical housing locating washers
Support washers U2

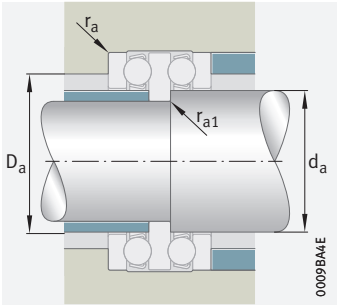


Mounting dimensions

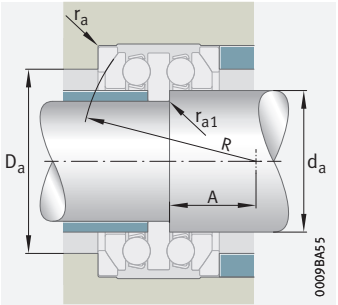


Mounting dimensions

| Dimensions | | | | | | | | | | | Mounting dimensions | | | |
|---|---|---|---|---|---|---|---|---|---|---|---|---|---|---|
| d | $D_1$ | B | r<br>min. | $r_1$<br>min. | R | A | $D_2$ | $D_3$ | C | $T_3$ | $d_a$ | $D_a$<br>max. | $r_a$<br>max. | $r_{a1}$<br>max. |
| **140** | 163 | 20 | 1,5 | 1,1 | – | – | – | – | – | – | 160 | 186 | 1,5 | 1 |
| | 163 | 20 | 1,5 | 1,1 | 160 | 70 | 110 | 235 | 21 | 190 | 160 | 190 | 1,5 | 1 |
| | 164 | 33 | 3 | 1,1 | – | – | – | – | – | – | 160 | 204 | 2,5 | 1 |
| **150** | 173 | 21 | 1,5 | 1,1 | – | – | – | – | – | – | 170 | 198 | 1,5 | 1 |
| | 173 | 21 | 1,5 | 1,1 | 180 | 87 | 117 | 250 | 21,5 | 200 | 170 | 200 | 1,5 | 1 |
| | 183 | 21 | 1,5 | 2 | – | – | – | – | – | – | 180 | 208 | 1,5 | 1 |
| | 183 | 21 | 1,5 | 2 | 200 | 108,5 | 118 | 260 | 21,5 | 210 | 180 | 210 | 1,5 | 1 |
| | 174 | 33 | 3 | 1,1 | – | – | – | – | – | – | 170 | 214 | 2,5 | 1 |
| **160** | 194 | 24 | 2 | 2 | – | – | – | – | – | – | 190 | 222 | 2 | 2 |
| | 194,7 | 24 | 2 | 2 | 200 | 93,5 | 131 | 280 | 23 | 230 | 190 | 230 | 2 | 2 |
| | 195 | 40 | 4 | 2 | – | – | – | – | – | – | 190 | 242 | 3 | 2 |
| **170** | 204 | 24 | 2 | 2 | – | – | – | – | – | – | 200 | 232 | 2 | 2 |
| | 204 | 24 | 2 | 2 | 225 | 120,5 | 133 | 290 | 23 | 240 | 200 | 240 | 2 | 2 |
| **190** | 224 | 24 | 2 | 2 | – | – | – | – | – | – | 220 | 252 | 2 | 2 |
| | 224 | 24 | 2 | 2 | 225 | 114 | 134 | 310 | 25 | 260 | 220 | 260 | 2 | 2 |